Technical Report HL-94-9
July 1994

HYDRAULICS LAB COPY

US Army Corps of Engineers
Waterways Experiment Station

Cypress Avenue Pumping Station

Hydraulic Model Investigation

by Bobby P. Fletcher

Approved For Public Release; Distribution Is Unlimited

Prepared for U.S. Army Engineer District, Huntington

The contents of this report are not to be used for advertising, publication, or promotional purposes. Citation of trade names does not constitute an official endorsement or approval of the use of such commercial products.

PRINTED ON RECYCLED PAPER

Technical Report HL-94-9
July 1994

Cypress Avenue Pumping Station

Hydraulic Model Investigation

by Bobby P. Fletcher

U.S. Army Corps of Engineers
Waterways Experiment Station
3909 Halls Ferry Road
Vicksburg, MS 39180-6199

Final report

Approved for public release; distribution is unlimited

Prepared for U.S. Army Engineer District, Huntington
502 8th Street
Huntington, WV 25701-2070

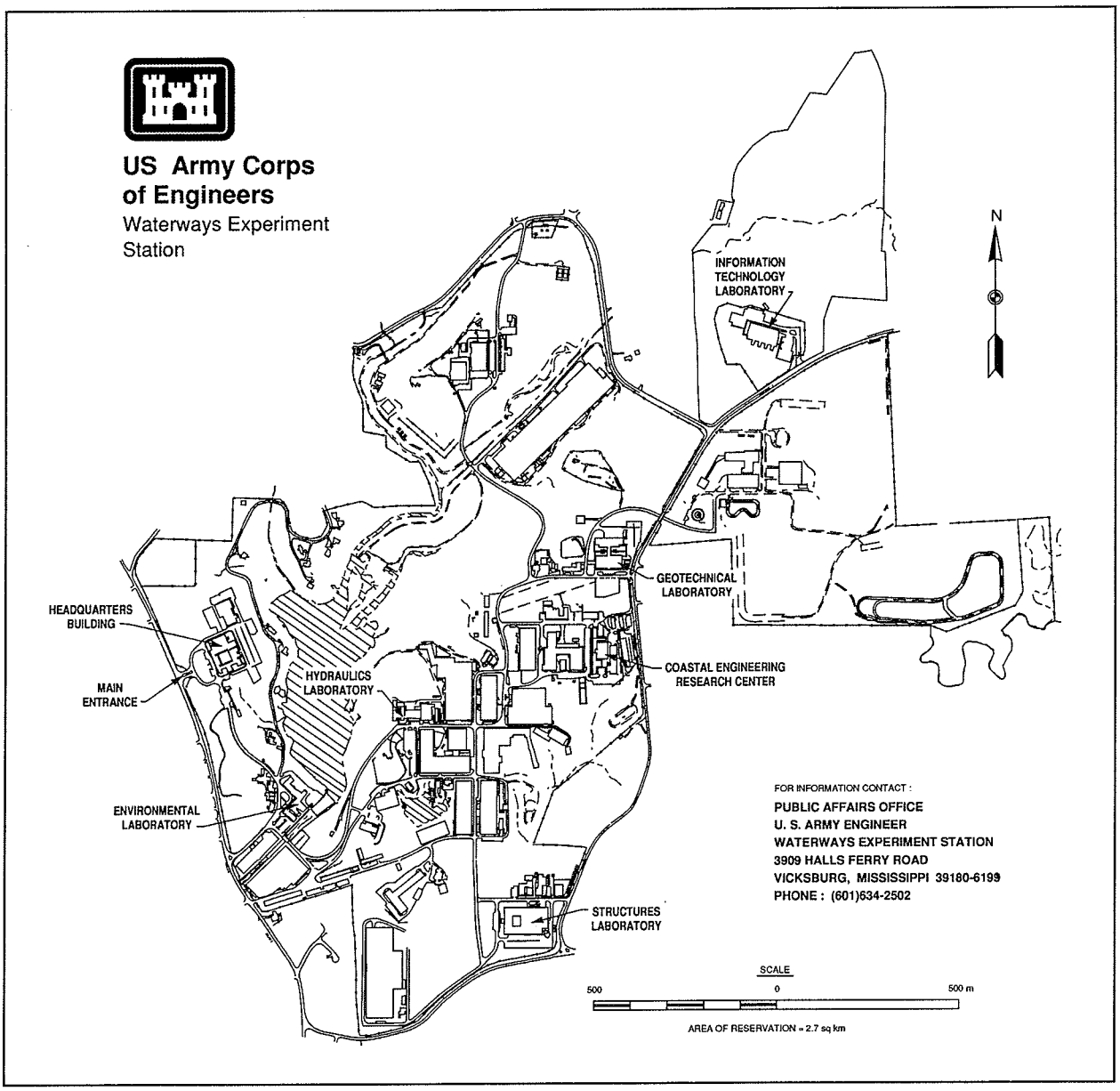

Waterways Experiment Station Cataloging-in-Publication Data

Fletcher, Bobby P.
Cypress Avenue Pumping Station : Hydraulic model investigation / by Bobby P. Fletcher ; prepared for U.S. Army Engineer District, Huntington.
52 p. : ill. ; 28 cm. — (Technical report ; HL-94-9)
Includes bibliographic references.
1. Pumping stations — Ohio — Columbus. 2. Pumping machinery — Fluid dynamics — Models. 3. Intakes (Hydraulic engineering) — Design and construction — Models. 4. Hydraulic models. I. United States. Army. Corps of Engineers. Huntington District. II. U.S. Army Engineer Waterways Experiment Station. III. Hydraulics Laboratory (U.S.) IV. Title. V. Series: Technical report (U.S. Army Engineer Waterways Experiment Station) ; HL-94-9.
TA7 W34 no.HL-94-9

Contents

Preface iv

Conversion Factors, Non-SI to SI Units of Measurement v

1—Introduction 1

The Prototype 1
Purpose and Scope of Model Study 1

2—The Model 5

Description 5
Evaluation Techniques 5
Scale Relations 9

3—Tests and Results 11

Original Design 11
Type 2 Design 11
Type 3 Design 12
Type 4 Design 13

4—Summary and Discussion of Results 14

Photo 1

Plates 1-28

SF 298

Preface

The study of the sump for the Cypress Avenue Pumping Station was authorized by the Headquarters, U.S. Army Corps of Engineers (HQUSACE), on 12 January 1993, at the request of the U.S. Army Engineer District, Huntington (ORH).

The study was conducted during the period January 1993 to October 1993 in the Hydraulics Laboratory (HL) of the U.S. Army Engineer Waterways Experiment Station (WES) under the direction of Messrs. F. A. Herrmann, Jr., Director, HL, and R. A. Sager, Assistant Director, HL, and under the general supervision of Messrs. G. A. Pickering, Chief of the Hydraulics Structures Division (HSD), HL, and N. R. Oswalt, Chief of the Spillways and Channels Branch, HSD. Project engineers for the model study were Messrs. B. P. Fletcher and J. L. Leech, both of HSD. This report was prepared by Mr. Fletcher.

During the model investigation, Messrs. Bob Kinzel, HQUSACE; Claudy Thomas and Lyn Richardson, U.S. Army Engineer Division, Ohio River; Russ Witten, Ken Halstead, and John Justice, ORH; Dick Morris and Tom Russell, City of Columbus; and Dennis Long, Malcolm Pirnie, Inc., visited WES to observe the model in operation and discuss the program of tests.

At the time of publication of this report, Director of WES was Dr. Robert W. Whalin. Commander was COL Bruce K. Howard, EN.

The contents of this report are not to be used for advertising, publication, or promotional purposes. Citation of trade names does not constitute an official endorsement or approval of the use of such commercial products.

Conversion Factors, Non-SI to SI Units of Measurement

Non-SI units of measurement used in this report can be converted to SI units as follows:

Multiply	By	To Obtain
cubic feet	0.028	cubic meters
feet	0.304	meters
gallons per minute	3.785	cubic decimeters per minute
gallons (U.S. liquid)	3.785	cubic decimeters
inches	25.4	millimeters
miles (U.S. statute)	1.609	kilometers

1 Introduction

The Prototype

The proposed Cypress Avenue pumping station will be located in the city of Columbus, Ohio (Figure 1). The protection project is located on the right bank of the Scioto River in the western part of the city of Columbus, Ohio, and is generally bounded by the Scioto River on the north and east and Interstate 70 on the south and west (Figure 2).

The pumping station will consist of three pumps (Plate 1) and have a total capacity of 402 cfs.[1] Each pump will have a formed suction intake (FSI). Flow will enter the sump from the gravity flow chamber which will be supplied by a new relocated section of 12-ft by 6-ft rectangular conduit from the existing elliptical storm sewer along Cypress Avenue and a new 5-ft diam storm sewer from Nace Avenue (Figure 2, Plate 1). An 11-ft by 7-ft motor-operated sluice gate will separate the pump chamber from the gravity outfall (Plate 2). Two 7-ft by 7.83-ft motor-operated outfall gates will be provided at the downstream end of the gravity outfall (Plate 2). The outfall gates can be used as a bypass to increase cycle times. A trashrack will be provided to screen flows during pump operation (Plate 2). Raking will be accomplished manually. The pumping station will be designed to operate at water-surface elevations ranging from 696.3 to 703.0.[2] A profile of the sump is shown in Plate 3.

Purpose and Scope of Model Study

Pump performance can be adversely affected by uneven and unstable flow distribution approaching the pump propeller. Cavitation, vibration,

---

[1] A table of factors for converting non-SI units of measurement to SI units is presented on page v.

[2] All elevations (el) cited herein are in feet referred to the National Geodetic Vertical Datum (NGVD).

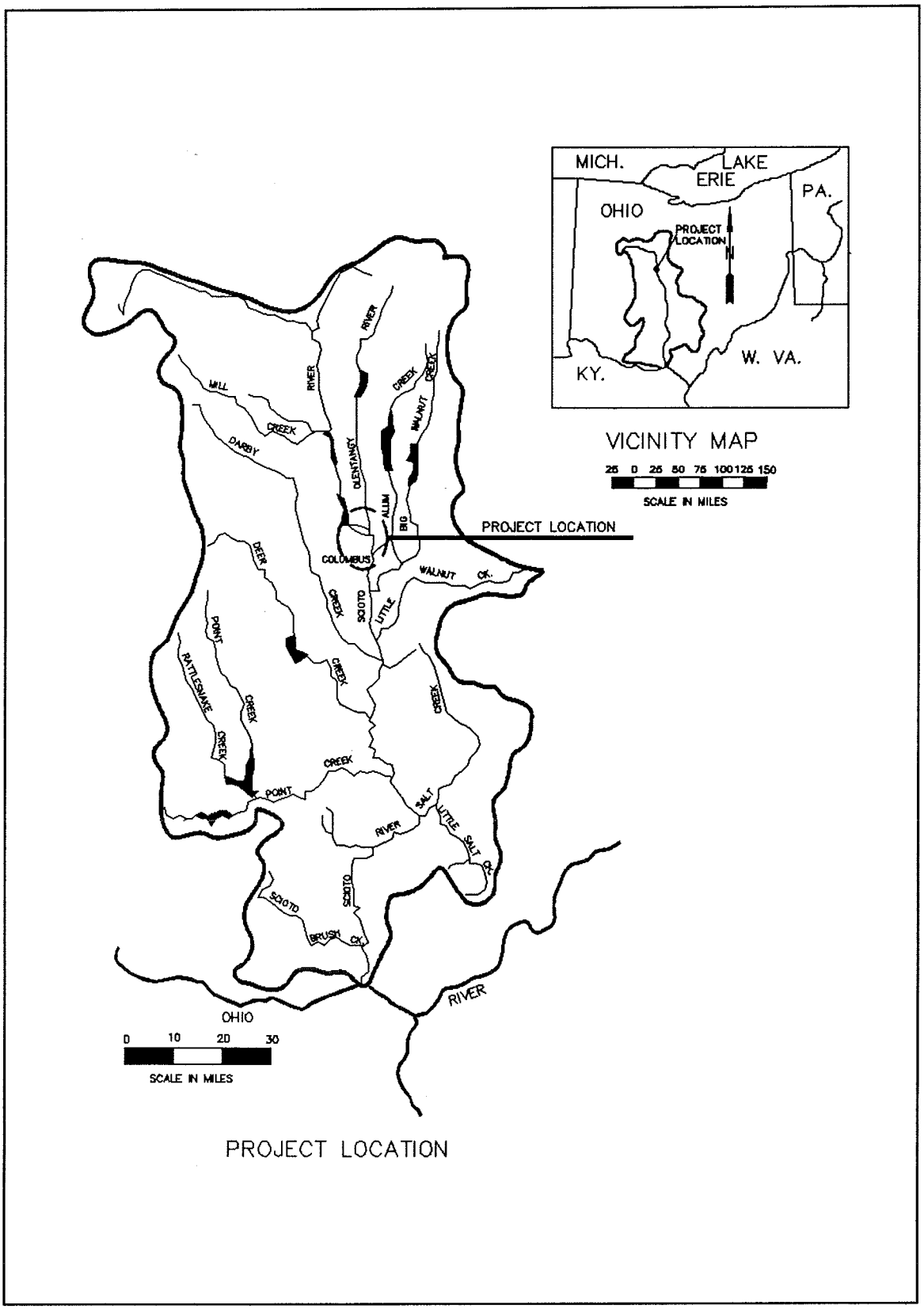

Figure 1. Location and vicinity maps

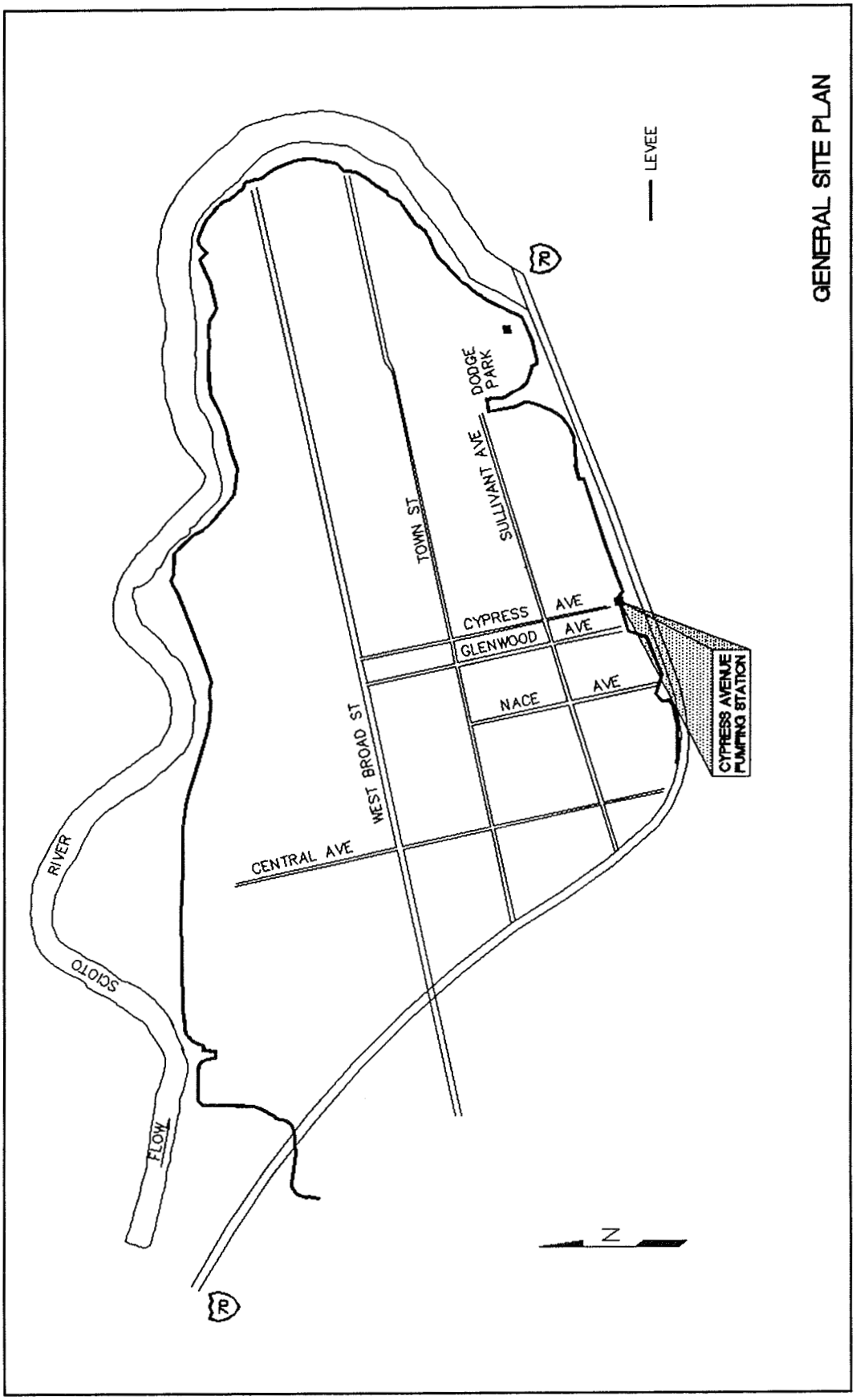

Figure 2. General site plan

and excessive stresses on the pump can result from adverse approach flow. Research conducted by the U.S. Army Engineer Waterways Experiment Station (WES) resulted in the development of a pump intake design, FSI, that provided satisfactory flow to the pump.[1] The pumps in the Cypress Avenue Pumping Station were designed to include the FSIs. However, due to the unique and severe adverse approach flows anticipated in the Cypress Avenue Pumping Station, a model study was considered necessary to evaluate the hydraulic characteristics of the original design and to develop modifications, if needed, to improve flow distribution approaching the pump intakes.

The model reproduced sufficient approach flow to the sump to permit simulation of currents and velocities in the sump. Hydraulic performance was evaluated for a range of anticipated discharges and sump water surface elevations.

---

[1] Headquarters, U.S. Army Corps of Engineers. (31 December 1992). "Geometry limitations for the formed suction intake," ETL 1110-2-327, U.S. Government Printing Office, Washington, DC.

2 The Model

Description

The 1:11-scale model of the Cypress Avenue Pumping Station (Plate 1, Figure 3) included 42.5 ft of the elliptical and 81.3 ft of the rectangular conduit, two junction boxes, 44 ft of the 5-ft-diam conduit approaching the sump, 30.86 ft of the gravity flow chamber, the sump, the trashrack, and three FSIs. The approach conduits, gravity flow section, sump, and FSIs were constructed of transparent plastic to permit observation of vortices, turbulence, and subsurface currents. Flow through each pump intake was provided by individual suction pumps that permitted simulation of various flow rates through one or more pump intakes.

Water used in the model was stored and recycled in a headbox (Figure 3), and discharges through each pump intake were measured by electronic flow meters. Discharges through each sump inflow conduit were measured by orifice meters.

Evaluation Techniques

Techniques used for evaluation of hydraulic performance include the following:

a. Current patterns were determined using dye injected into the water and confetti sprinkled on the water surface. Water-surface elevations were measured with staff and point gauges.

b. Visual observations were made to detect surface and/or submerged vortices. A design that permits a Stage D surface vortex or submerged vortex with a visible air core is considered unacceptable. Stages of surface vortex development are shown in Plate 4. A typical test consisted of documentation for a given flow condition of the severest vortex that occurred in a 5-min (model time) time period.

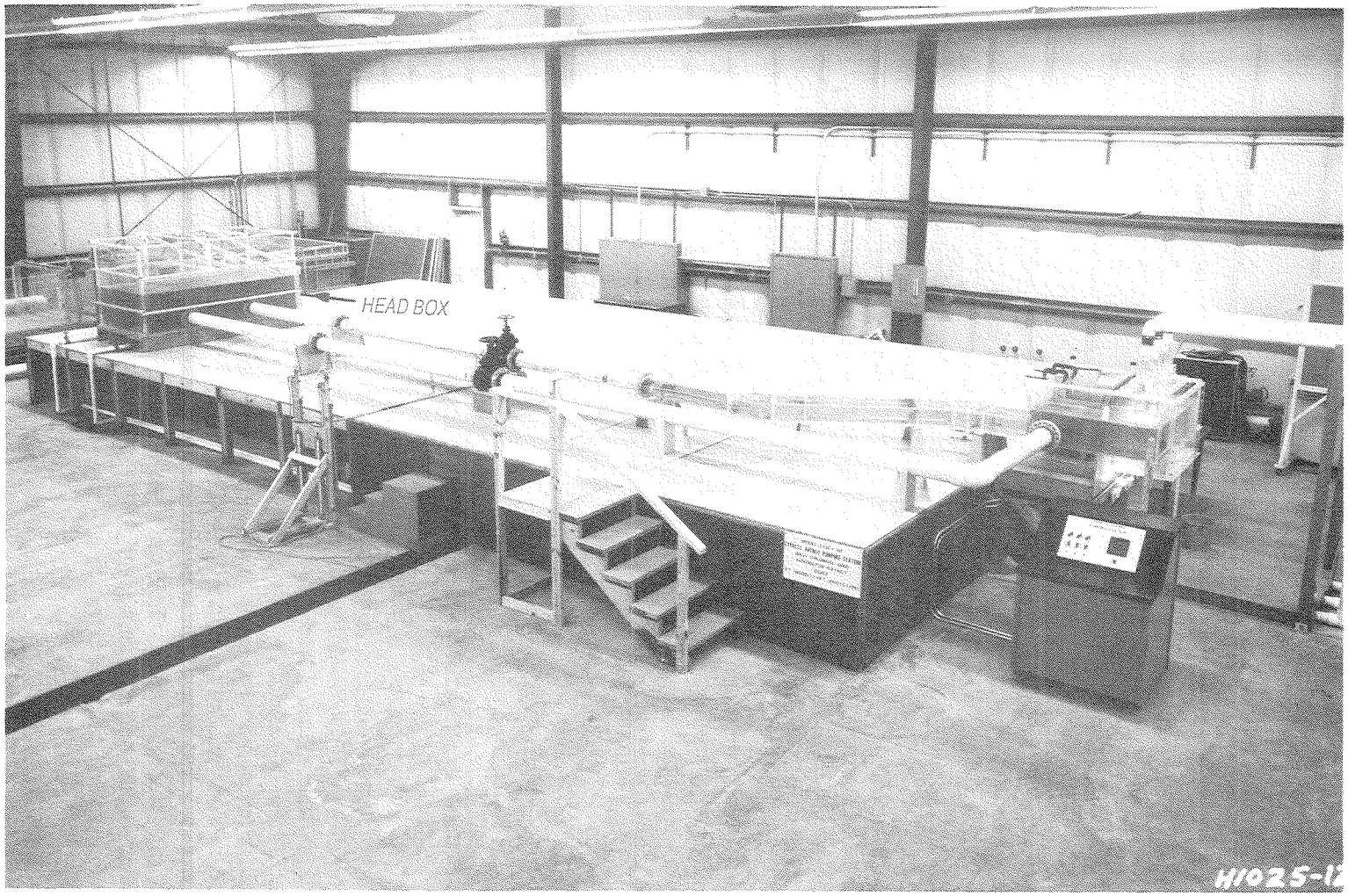

a. General view

Figure 3. The 1:11-scale model (Sheet 1 of 3)

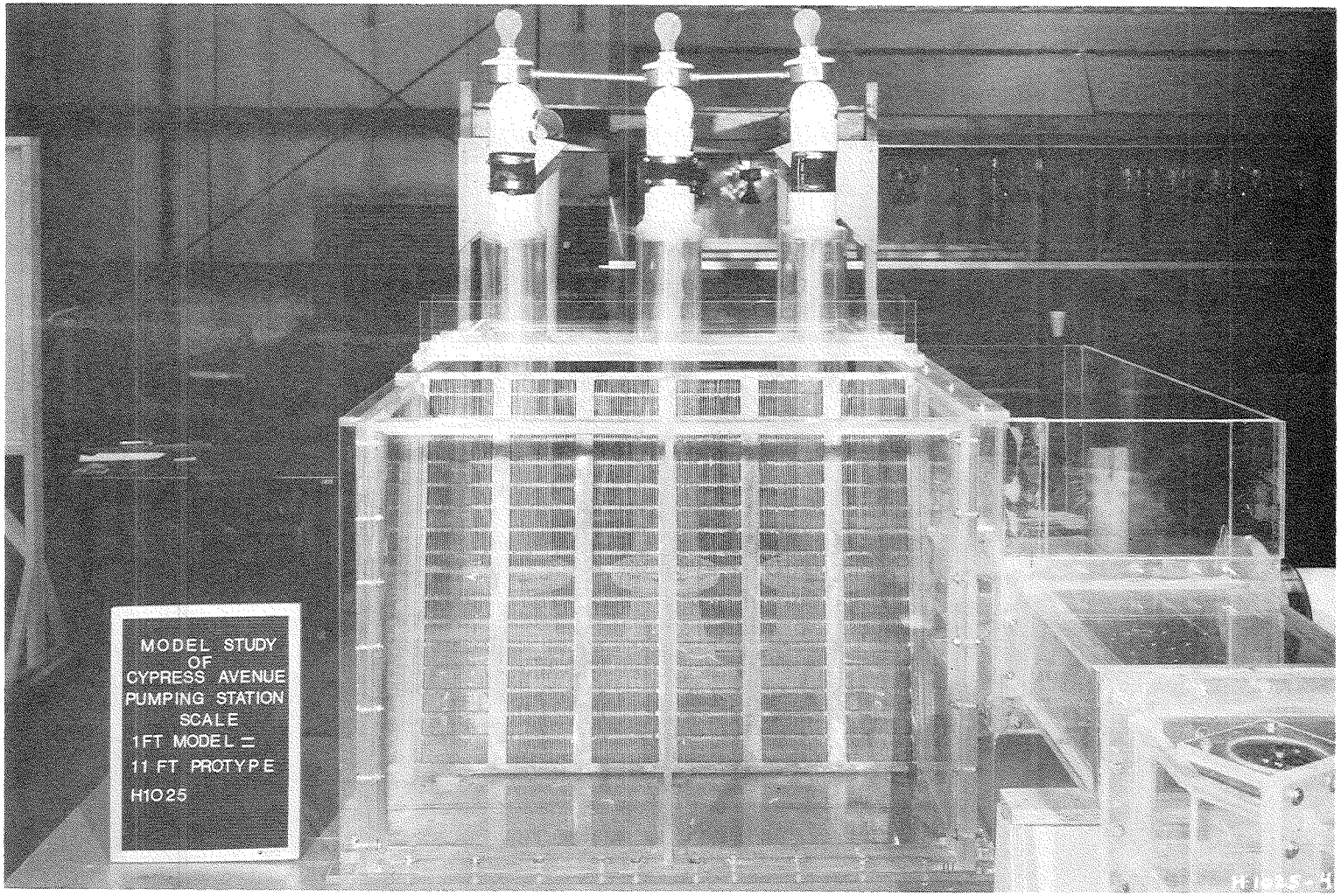

b. Elevation view

Figure 3. (Sheet 2 of 3)

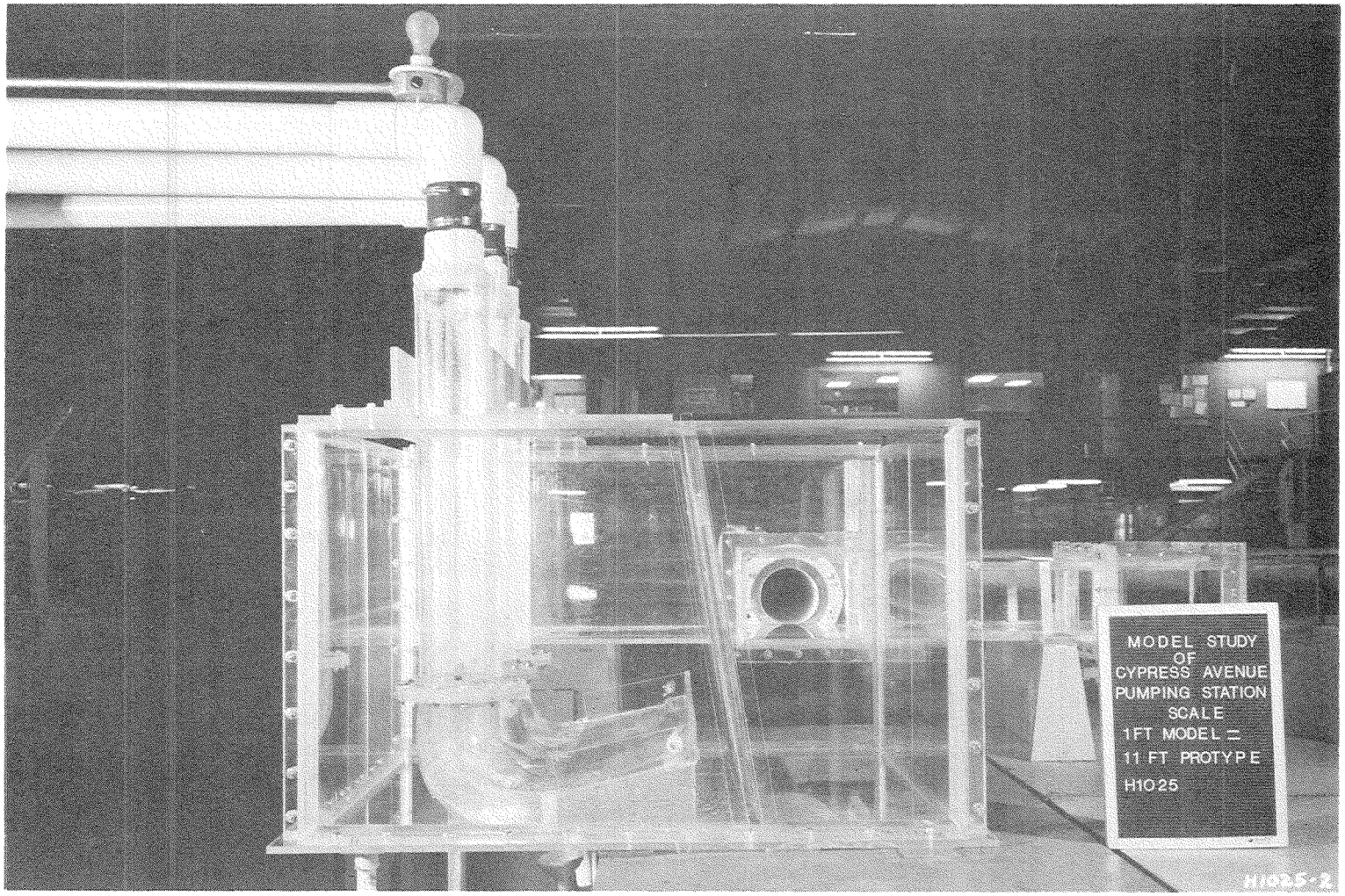

c. Profile view

Figure 3. (Sheet 3 of 3)

c. Swirl angle was measured to indicate the strength of swirl entering the pump intake. A swirl angle that exceeds 3 deg is considered unacceptable. Swirl in the pump columns was indicted by a vortimeter (free-wheeling propeller with zero-pitch blades) located inside the pump column (Plate 3). Swirl angle is defined as the ratio of the blade speed at the tip of the vortimeter blade V_θ to the average velocity V_a for the cross section of the pump column. The swirl angle θ is computed from the following formula:

$$\theta = \tan^{-1}\frac{V_\theta}{V_a}, \; V_\theta = \pi d n, \; V_a = \frac{Q}{A} \tag{1}$$

where

θ = swirl angle, deg

V_θ = tangential velocity at the tip of the vortimeter blade, ft/sec

V_a = average pump column axial velocity, ft/sec

d = pump column diam (used for blade length), ft

n = revolutions per second of the vortimeter

Q = pump discharge, ft^3/sec

A = cross-sectional area of the pump column, ft^2

Scale Relations

The model was sized so that the Reynolds number, defined as

$$R = \frac{Vd}{\gamma} \tag{2}$$

where

V = average velocity, ft/sec

d = diam of pump suction column, ft

γ = kinematic viscosity of fluid, ft/sec^2

is greater than 10^5 to minimize scale effects due to viscous forces.

The accepted equations of hydraulic similitude, based upon Froudian criteria, were used to express mathematical relations between the dimensions and hydraulic quantities of the model and prototype. The general relations expressed in terms of the model scale or length ratio, L_r, are presented in the following tabulation:

Dimension	Ratio	Scale Relation Model:Prototype
Length	L_r	1:11
Area	$A_r = L_r^2$	1:121
Velocity	$V_r = L_r^{1/2}$	1:3.32
Discharge	$Q_r = L_r^{5/2}$	1:401
Time	$T_r = L_r^{1/2}$	1:3.32

3 Tests and Results

Original Design

The pumping station sump (Plate 2) was oriented normal to the approach flow from the gravity flow chamber. Dimensions of the original design of the FSI are provided in Plate 5.

Tests were conducted with each inflow conduit delivering 50 percent of the total flow to the forebay. Initial tests were conducted to detect the presence of vortices. No submerged stage D surface vortices were observed for any test conditions. Thus, it was concluded that vortices did not impair hydraulic performance of the sump.

Tests to determine the swirl angle were conducted with various flow conditions. Plate 6 shows the swirl angle for every combination of pumps operating with sump water-surface elevations of 696.3, 700, and 703. The maximum allowable swirl angle of 3 deg was exceeded in pump 3 with the minimum sump water-surface elevation for two different conditions, as shown in Plate 6.

Removing the trashrack permitted additional adverse circulation in the sump and induced swirl in the FSIs. Thus, all tests were conducted with the trashrack installed (Plates 2 and 3).

Type 2 Design

Some tests with the Type 1 design indicated unsatisfactory hydraulic performance in the form of swirl angles that exceeded the acceptable angle of 3 deg. In the interest of improving hydraulic performance, numerous baffles, baffle sizes, and baffle locations were investigated. The Type 2 design (Plates 7-10) is a culmination of the various baffle configurations evaluated.

Initial tests were conducted with the inflow to the sump evenly divided between the rectangular and circular conduits (Plate 7). Swirl angles

documented for various water-surface elevations and combinations of pumps operating are shown by the bar charts in Plate 11. The swirl angles described by the bar charts are less than 3 deg. Thus, satisfactory flow distribution is provided to the cross section where the pump propeller would be located.

Tests were conducted to investigate hydraulic performance with each pump pumping more than the design pumping rate of 134 cfs per pump. Swirl angles measured with each pump pumping 157 and 179 cfs were less than 3 deg and are shown in Plate 12. Visual observations also indicated satisfactory hydraulic performance.

Tests were also conducted to investigate hydraulic performance with all inflow to the sump provided by either the rectangular conduit (Plate 13) or the circular conduit (Plate 14). Hydraulic performance was satisfactory and swirl angles were less than 3 deg, as documented by the bar charts in Plates 13-14.

Hydraulic performance of the sump was documented with debris added to the inflow to the sump. Floating debris with diameters of approximately 0.25 ft and lengths of 2 and 3 ft were simulated in the model. The debris tended to accumulate on the left side of the trashrack upstream of pump 3. Tests indicated that upstream of pump 3, a 2-ft width of the trashrack from the bottom to the water surface could be blocked, approximately 20 percent of the bay width, (Plate 15) without impairing hydraulic performance. Swirl angles measured with the trashrack partially blocked, as shown in Plate 15, are documented in Plate 16. Trashrack blockages exceeding 20 percent of the bay width induced adverse flow distribution entering the FSIs causing the swirl angles to exceed 3 deg.

The Type 2 design sump provided satisfactory hydraulic performance for various unbalanced inflows to the sump, sump water-surface elevations, pumping rates, and combination of pumps operating. No submerged vortices or air-entraining surface vortices were observed, and the measured swirl angles in the pump columns were less than 3 deg.

Type 3 Design

The FSI in the Type 2 design had a throat diameter, *d*, equal to 4.27 ft. To accommodate a smaller pump inlet diameter, the throat diameter of the FSI was reduced from 4.67 ft to 3.94 ft (Plate 17). Since the dimensions of the FSI were relative to *d*, the size of the FSI was reduced.

The Type 3 design is shown in Plates 18 and 19. The Type 3 design was unsatisfactory due to excessive swirl (swirl angles greater than 3 deg) measured in the pump columns. Swirl angles for various flow conditions are shown in Plate 20.

Type 4 Design

Baffles were installed in the sump (Type 4 design), as shown in Plates 21 and 22, to reduce the current circulation in the forebay, thereby improving the velocity distribution entering the FSIs. The Type 4 design provided satisfactory hydraulic performance for all anticipated flow conditions. Swirl angles measured with the inflow to the sump evenly divided between the rectangular and circular conduits (Plate 21) and for various water-surface elevations and combinations of pumps operating are shown in Plate 23. Swirl angles measured with 100 percent of the flow entering the sump from the rectangular conduit and then 100 percent from the circular conduit are shown in Plates 24 and 25, respectively. The Type 4 design was also evaluated with pumping rates higher than the design pumping rate of 134 cfs per pump. Swirl angles measured with pumping rates of 157 and 179 cfs per pump are shown in Plates 26 and 27, respectively. No submerged vortices or significant surface vortices were observed for any flow conditions. Tests were conducted to measure the surge generated in the sump by turning a pump on or off in less than 5 sec. Turning one pump on or off with the water-surface elevation between 696.3 and 703.0, regardless of the number of pumps operating, generated a surge in the sump less than 0.5 ft in height.

Debris tests similar to those conducted in the Type 2 design were conducted in the Type 4 design. Debris performance in the Type 4 design was similar to that observed in the Type 2 design. Debris tended to accumulate on the left side of the trashrack upstream of pump 3 and hydraulic performance was satisfactory if 20 percent of the bay width or less was blocked.

Tests were conducted to determine the water-surface differential between the sump and gravity bay during operation of various pumps. A plot depicting water-surface elevation in the sump versus water-surface elevation in the gravity bay is shown in Plate 28. The water-surface differential was the same regardless of the location or numbers of pumps operating.

Various flow conditions in the Type 4 design are illustrated in Photo 1. Surface currents are depicted by the flow vectors in Photo 1.

4 Summary and Discussion of Results

Normally the FSIs would compensate for the adverse approach flow to the pump intakes by providing a transition that accelerates flow from unstable and asymmetrical distribution entering the FSI to stable and symmetrical flow distribution at the cross section where the pump propeller would be located. The FSI design developed at WES in previous research performed satisfactorily in the laboratory with a variety of approach geometrics subjected to various adverse approach flow conditions that included flows approaching normal to the entrance of the FSI. However, nothing similar, or as adverse, to the approach flow and geometry of the sump in the proposed Cypress Avenue storm water pumping station was addressed in the FSI sump research. The initial design (Type 1) tested performed satisfactorily for most anticipated flow conditions but was unsatisfactory due to excessive swirl in the pump column that occurred at certain flow conditions. Satisfactory hydraulic performance for all anticipated flow conditions was obtained by adding baffles (flow deflectors) in the sump. The baffles (Type 2 design) reduced current circulation in the sump, thereby improving the velocity distribution entering the FSIs and reducing the swirl approaching the pump propeller.

Tests were conducted to investigate flow conditions with a FSI attached to a pump having a smaller inlet diameter and the baffles removed from the sump (Type 3 design). Since the dimensions of the FSI were relative to the pump inlet diameter, *d*, the size of the FSI was reduced. The Type 3 design performed similar to the Type 1 and was also unsatisfactory due to excessive swirl in the pump column.

Baffles were installed in the sump (Type 4 design) and hydraulic performance was satisfactory for all anticipated flow conditions. Tests also indicated that partial blockage of the trashrack would not impair hydraulic performance.

Tests conducted to evaluate surges in the sump due to a sudden shut down of one pump indicated a maximum surge height of 0.5 ft.

Test results to determine the water surface differential between the sump and gravity bay during operation of various pumps are shown in Plate 28.

The Type 4 design will provide satisfactory hydraulic performance and is recommended for the Cypress Avenue Pumping Station.

The sump design for the Dodge Park Pumping Station was reviewed by WES engineers and is similar to the sump design proposed for the Cypress Avenue Pumping Station. The Type 4 design is also recommended for the Dodge Park Pumping Station.

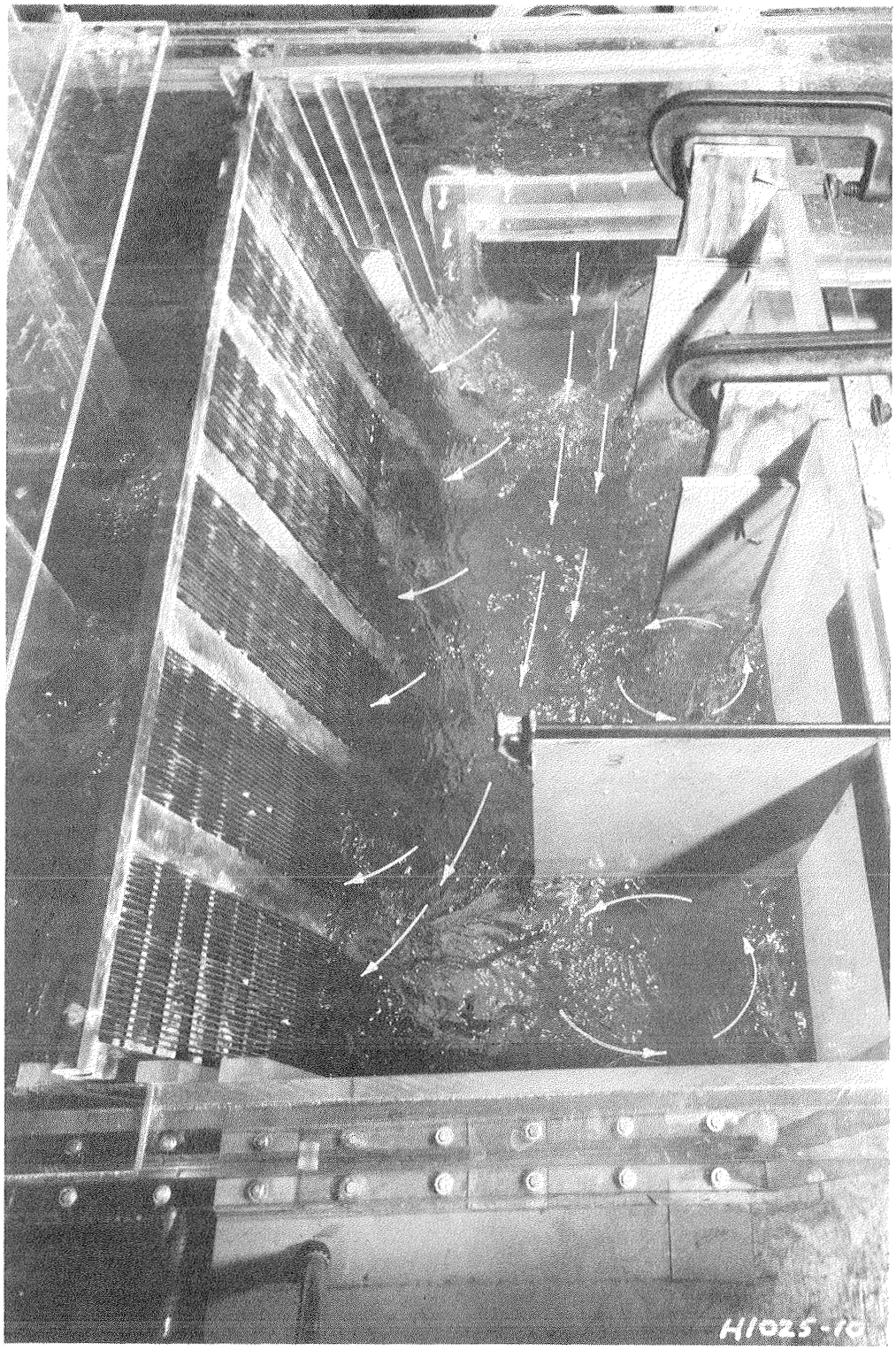

a. Water-surface el 696.3

Photo 1. Type 4 design; discharge per pump 134 cfs; 3 pumps operating (Sheet 1 of 3)

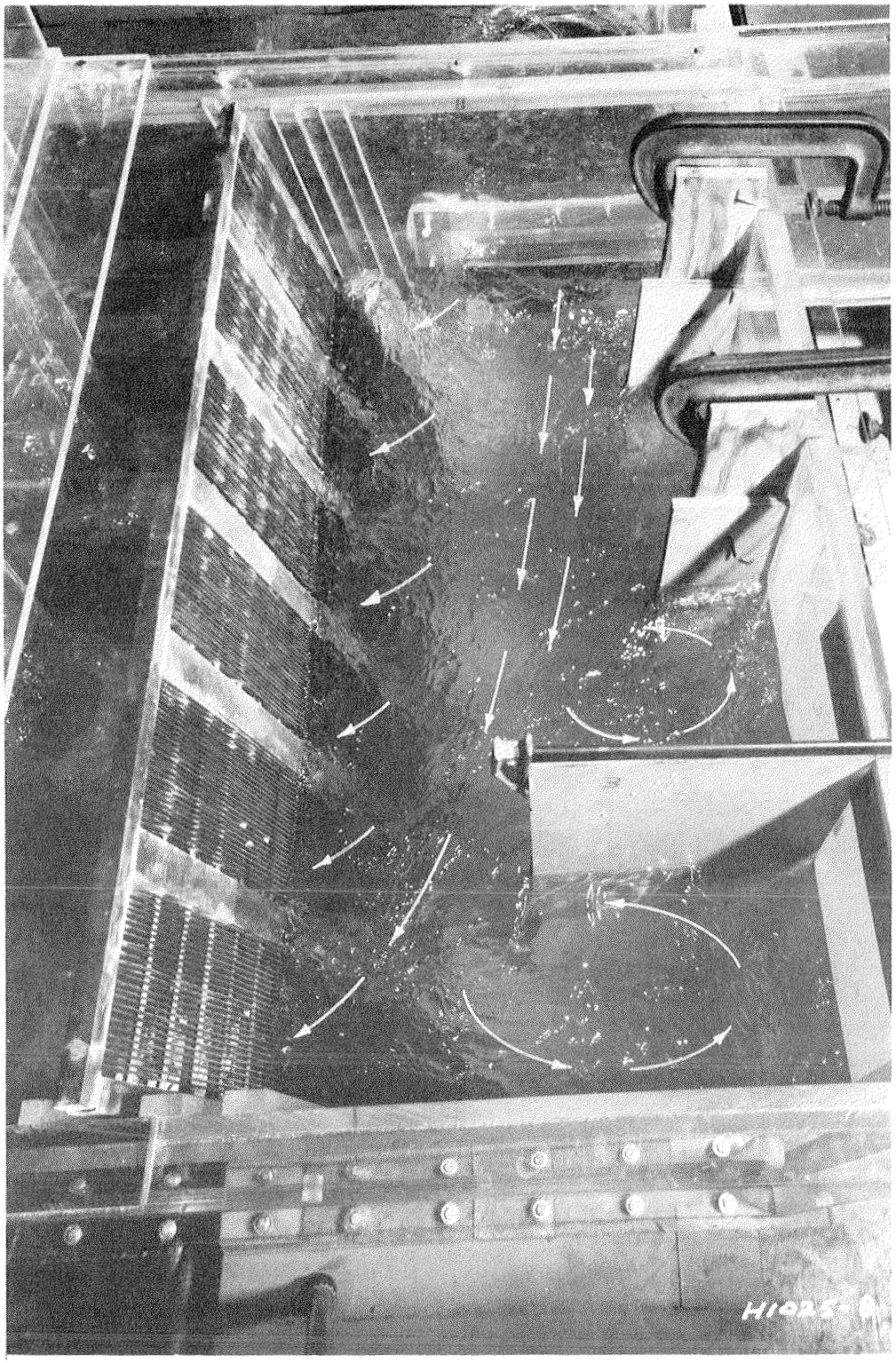

b. Water-surface el 700.0

Photo 1. (Sheet 2 of 3)

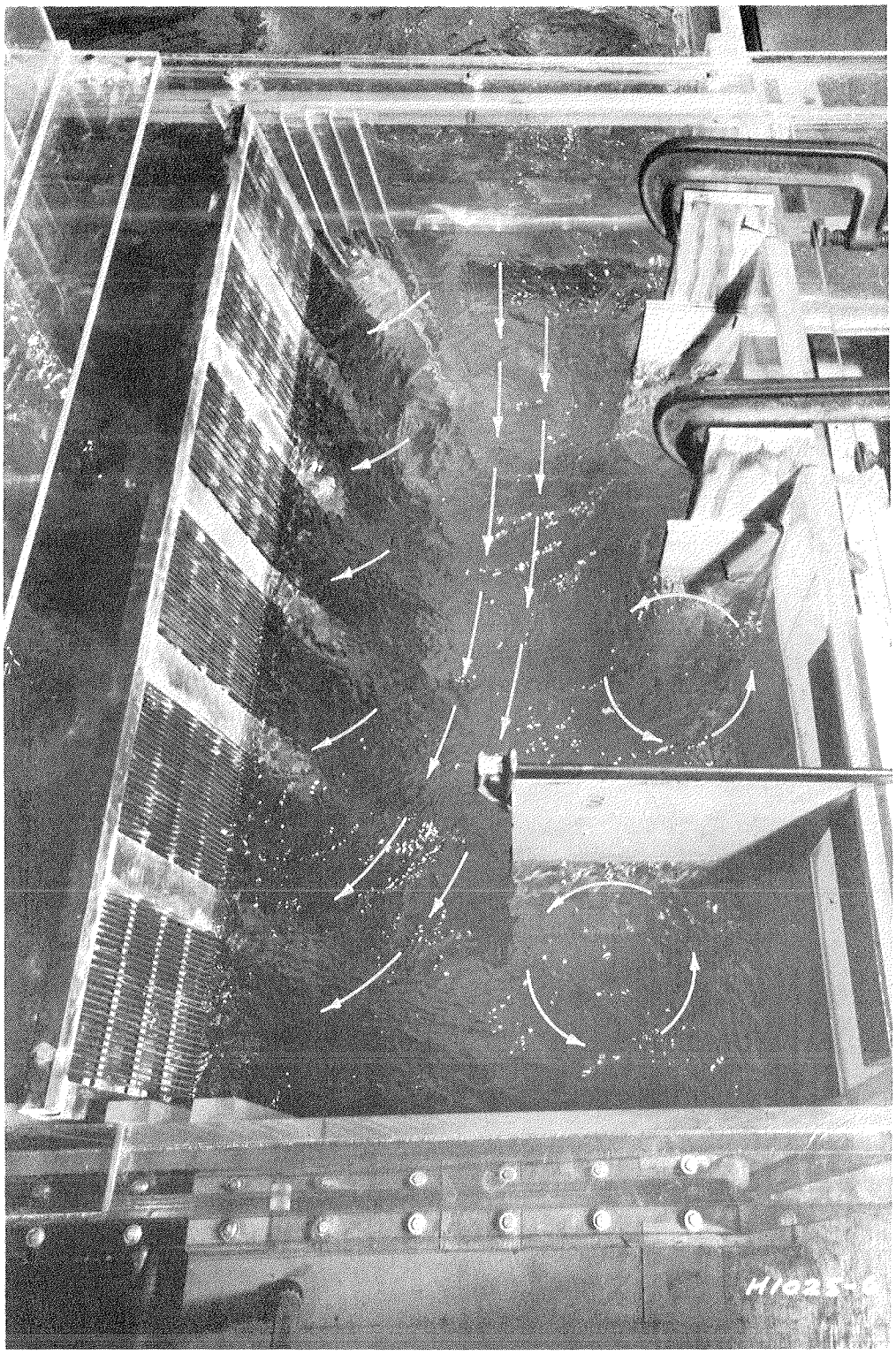

c. Water-surface el 703.0

Photo 1. (Sheet 3 of 3)

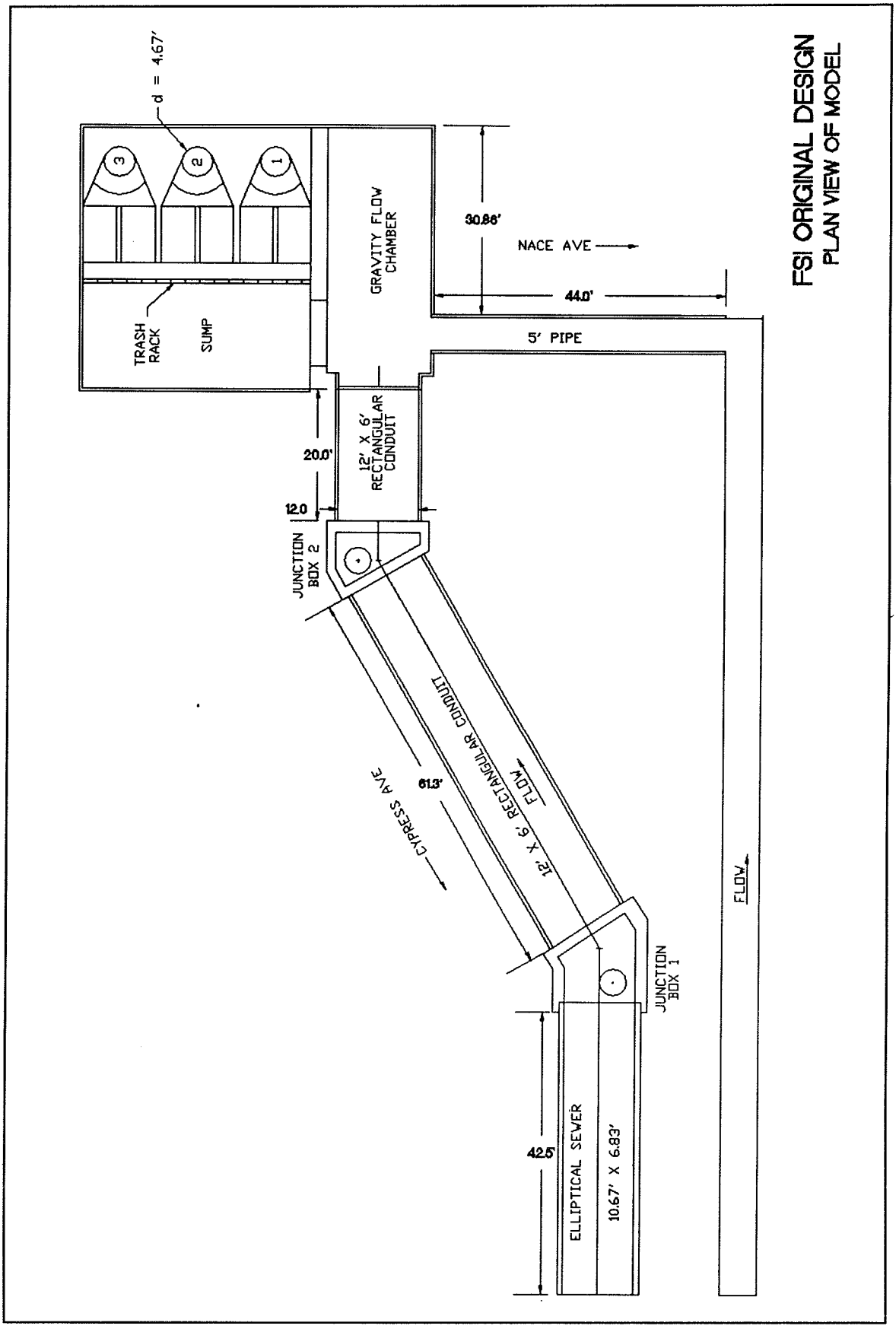
FSI ORIGINAL DESIGN
PLAN VIEW OF MODEL
d = 4.67'
3
2
1
TRASH RACK
SUMP
GRAVITY FLOW CHAMBER
30.86'
NACE AVE
44.0'
5' PIPE
12' X 6' RECTANGULAR CONDUIT
20.0'
12.0
JUNCTION BOX 2
12' X 6' RECTANGULAR CONDUIT
FLOW
61.3'
CYPRESS AVE
FLOW
JUNCTION BOX 1
42.5'
ELLIPTICAL SEWER
10.67' X 6.83'

Plate 1

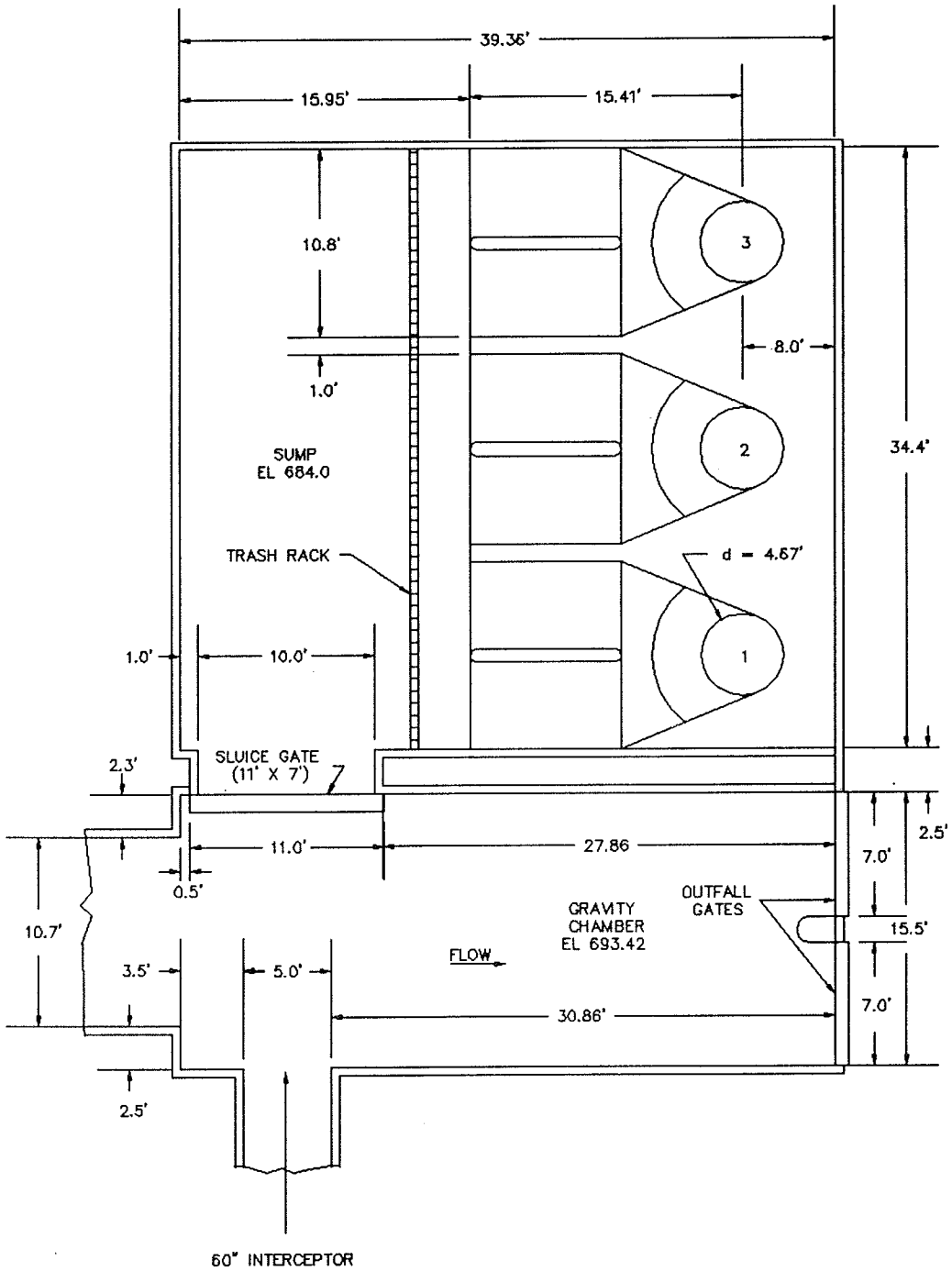

FSI ORIGINAL DESIGN
PLAN

Plate 2

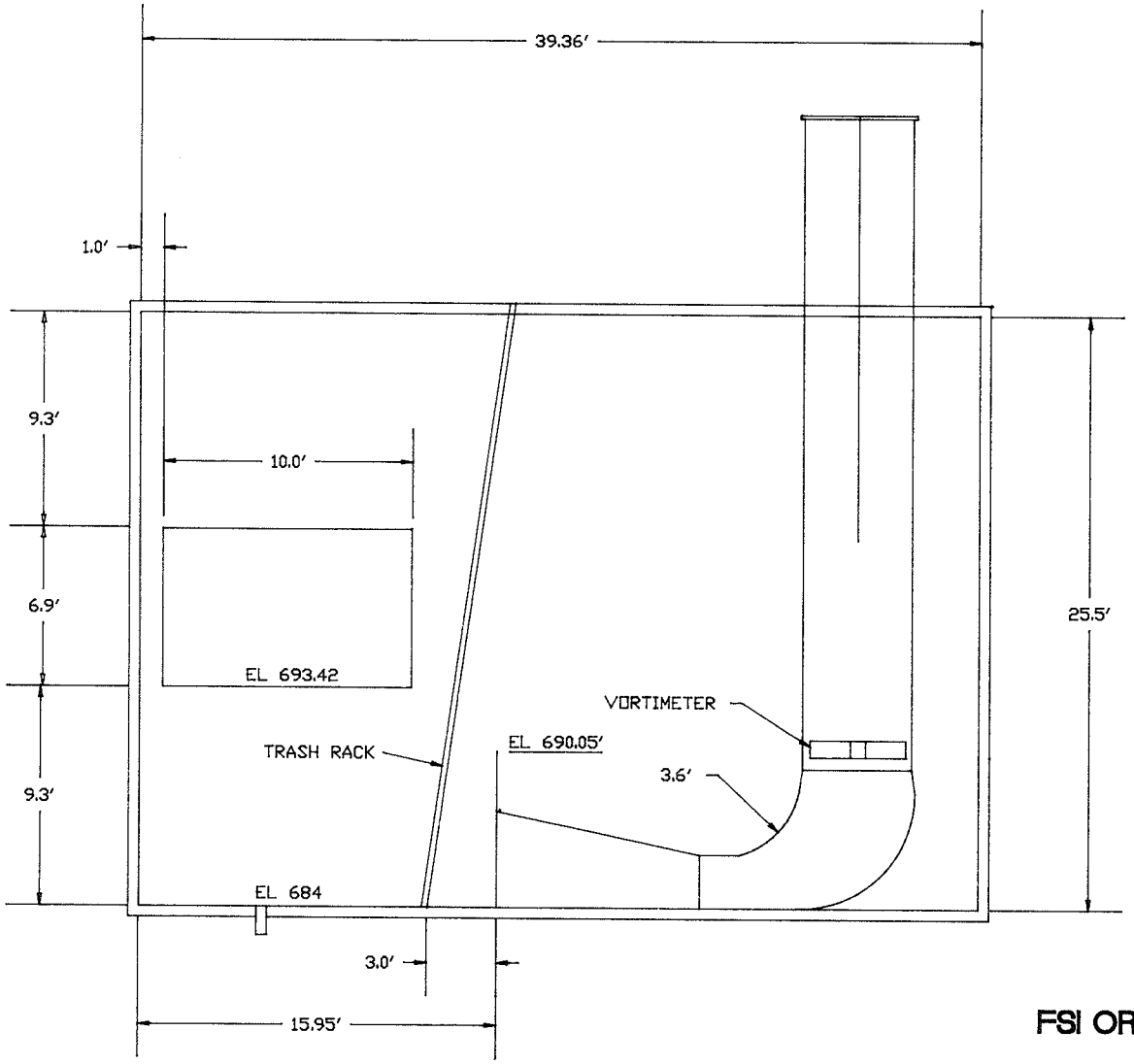

FSI ORIGINAL DESIGN
PROFILE

Plate 3

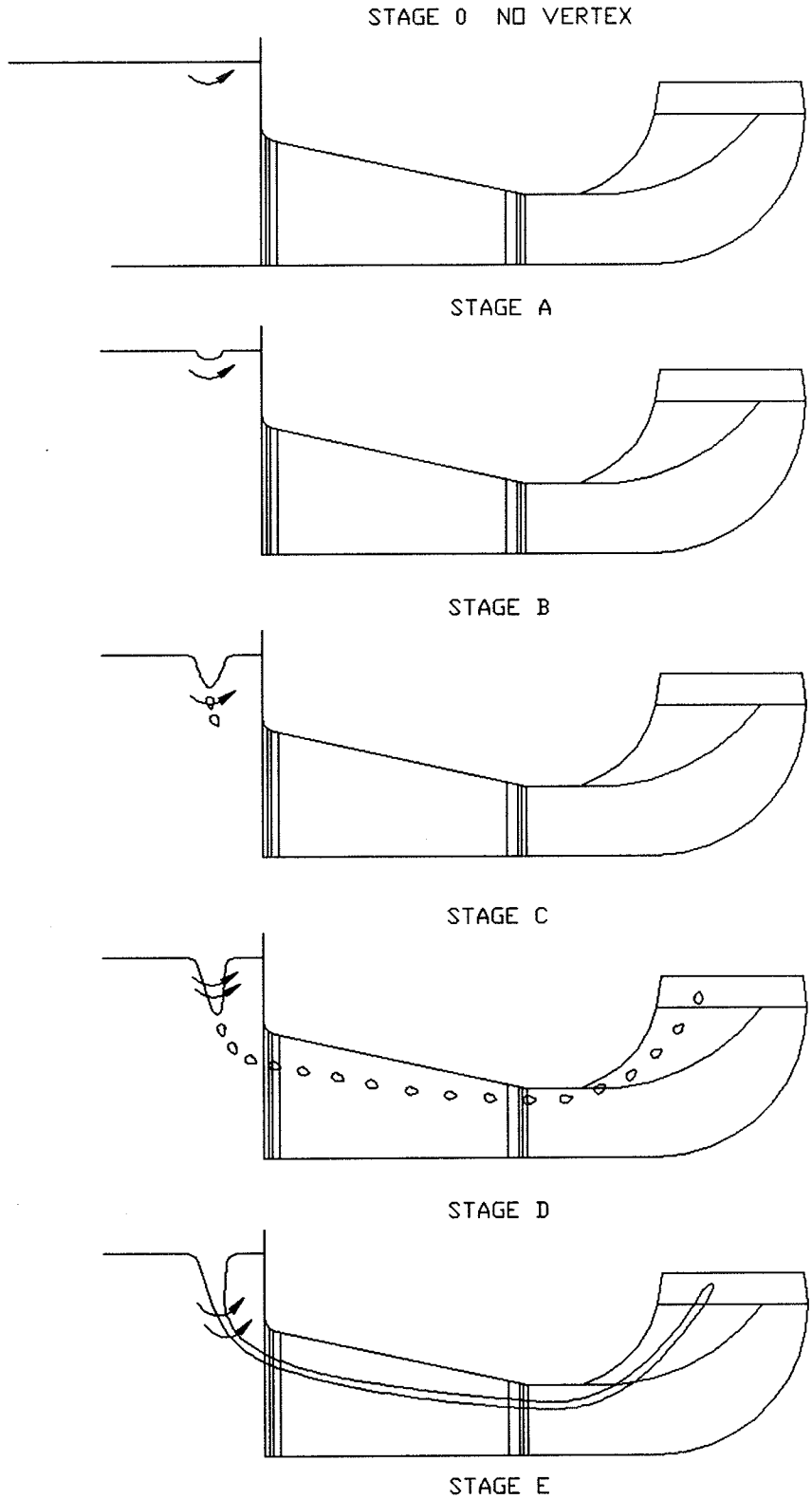

STAGES IN SURFACE VORTEX DEVELOPMENT
FORMED SUCTION INLET

Plate 4

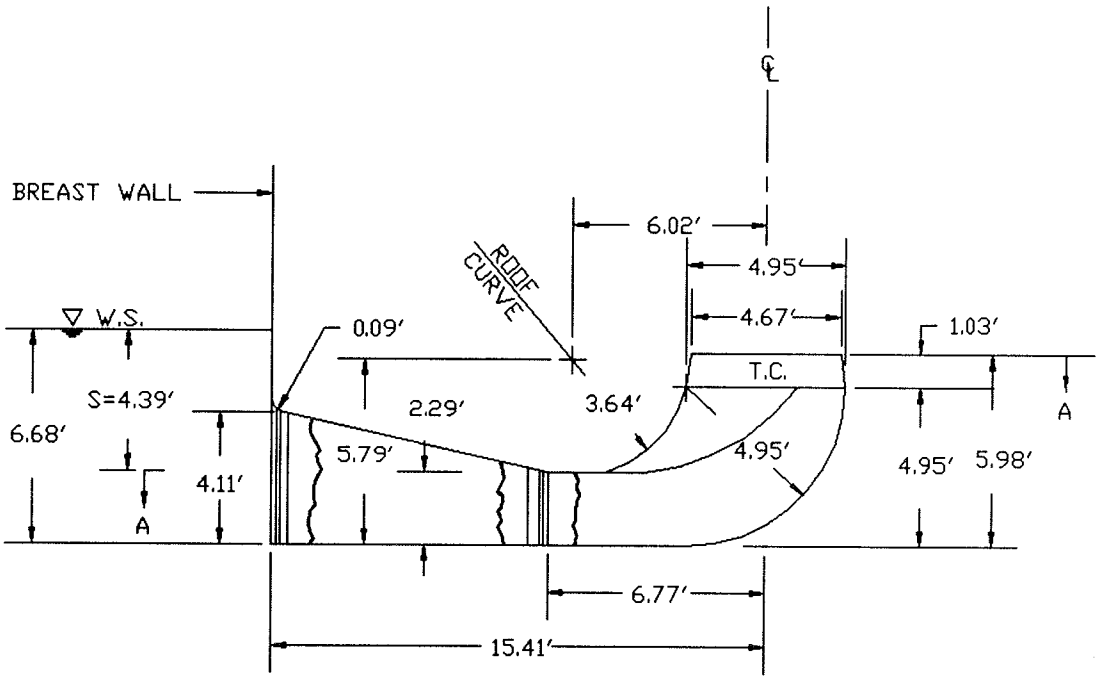

ELEVATION

T.C. = TRUNCATED CONE
S = MINIMUM SUBMERGENCE

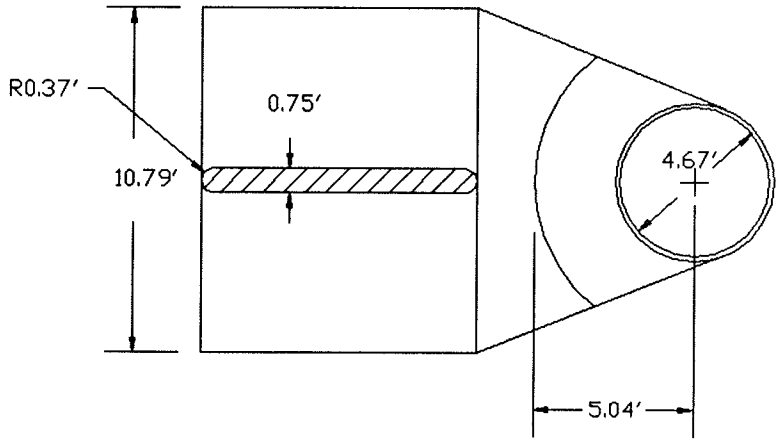

SECTION A-A

CYPRESS AVENUE PUMPING STATION
FSI (d = 4.67′)

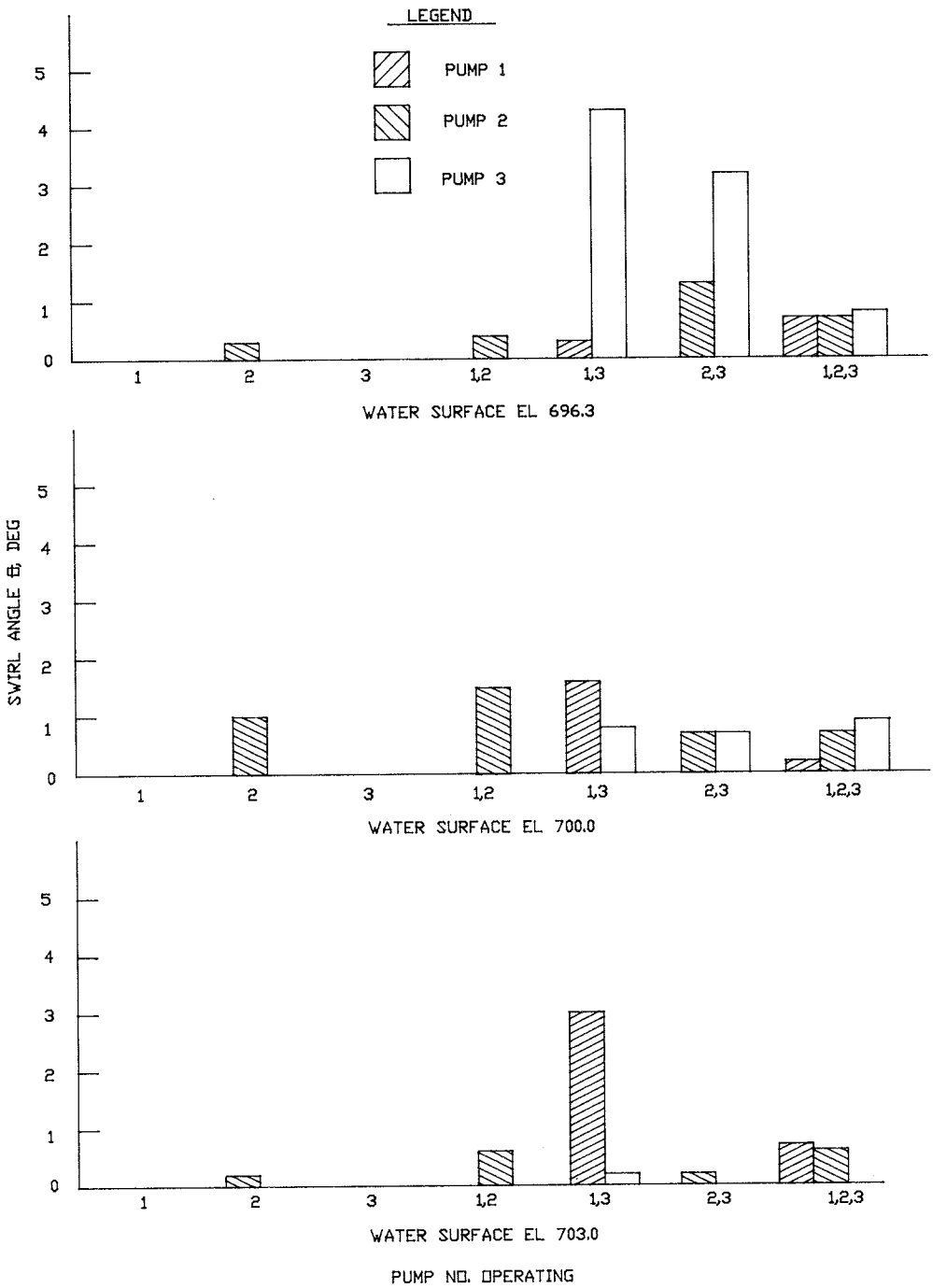

SWIRL ANGLE
ORIGINAL DESIGN
DISCHARGE PER PUMP 134 CFS

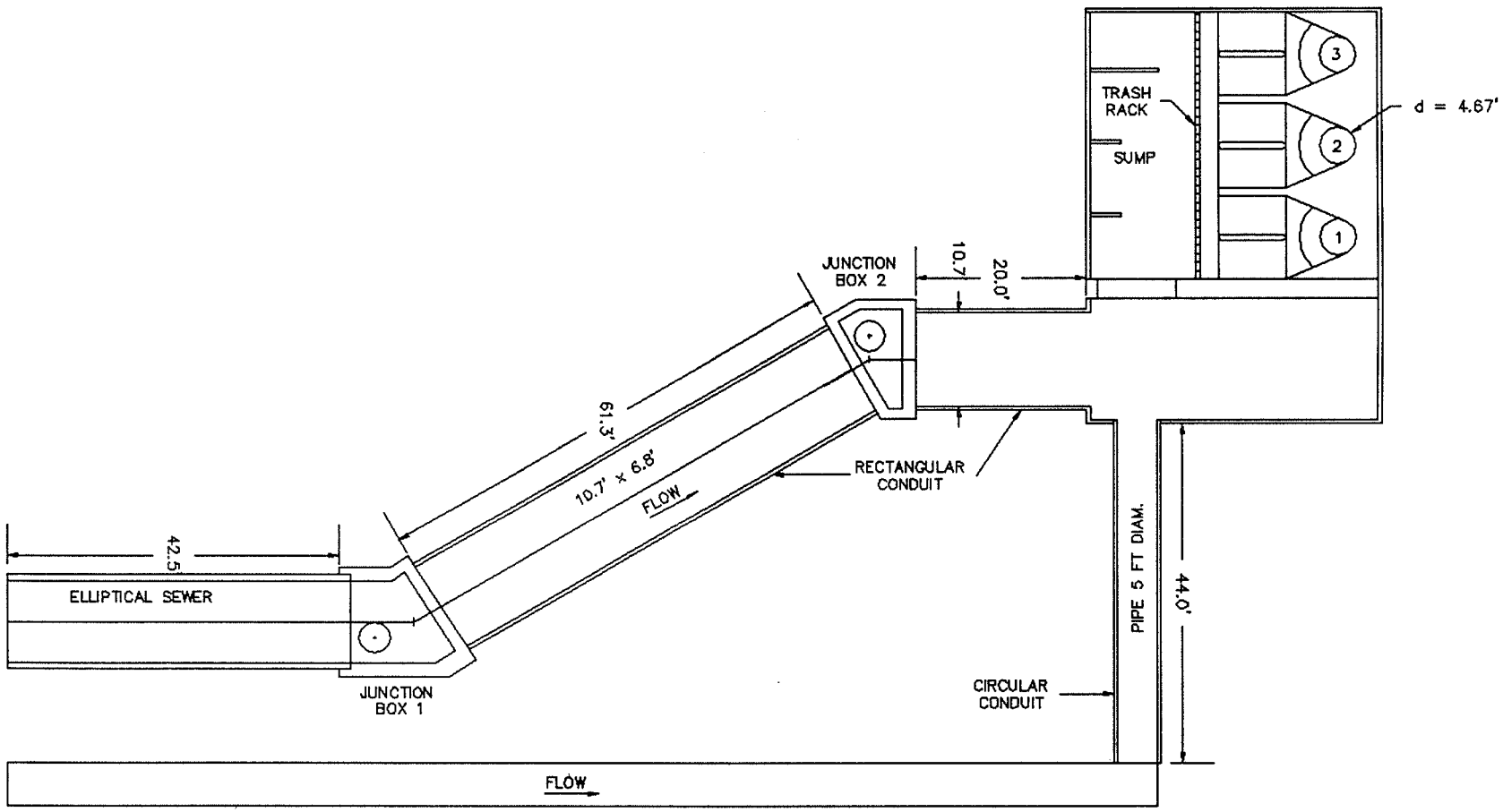

CYPRESS AVENUE PUMPING STATION
TYPE 2 DESIGN
GENERAL PLAN

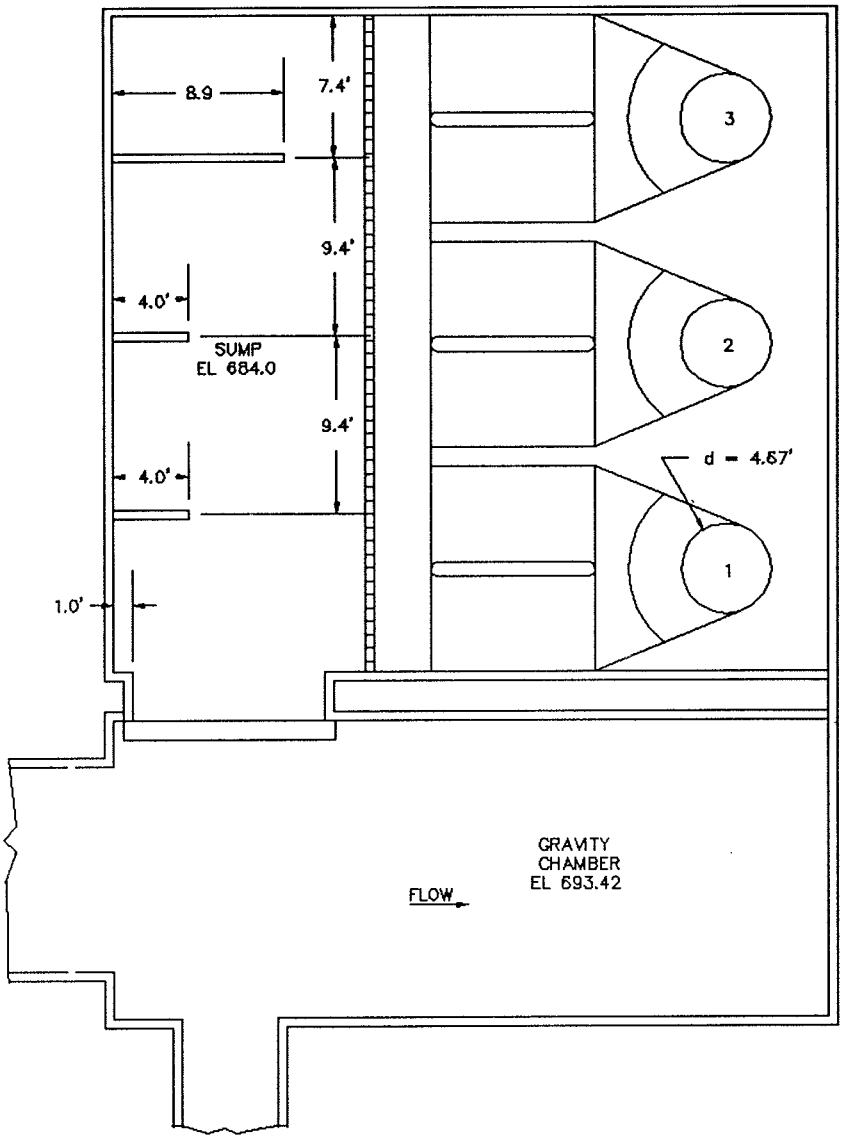

CYPRESS AVENUE PUMPING STATION
TYPE 2 DESIGN
PLAN

Plate 8

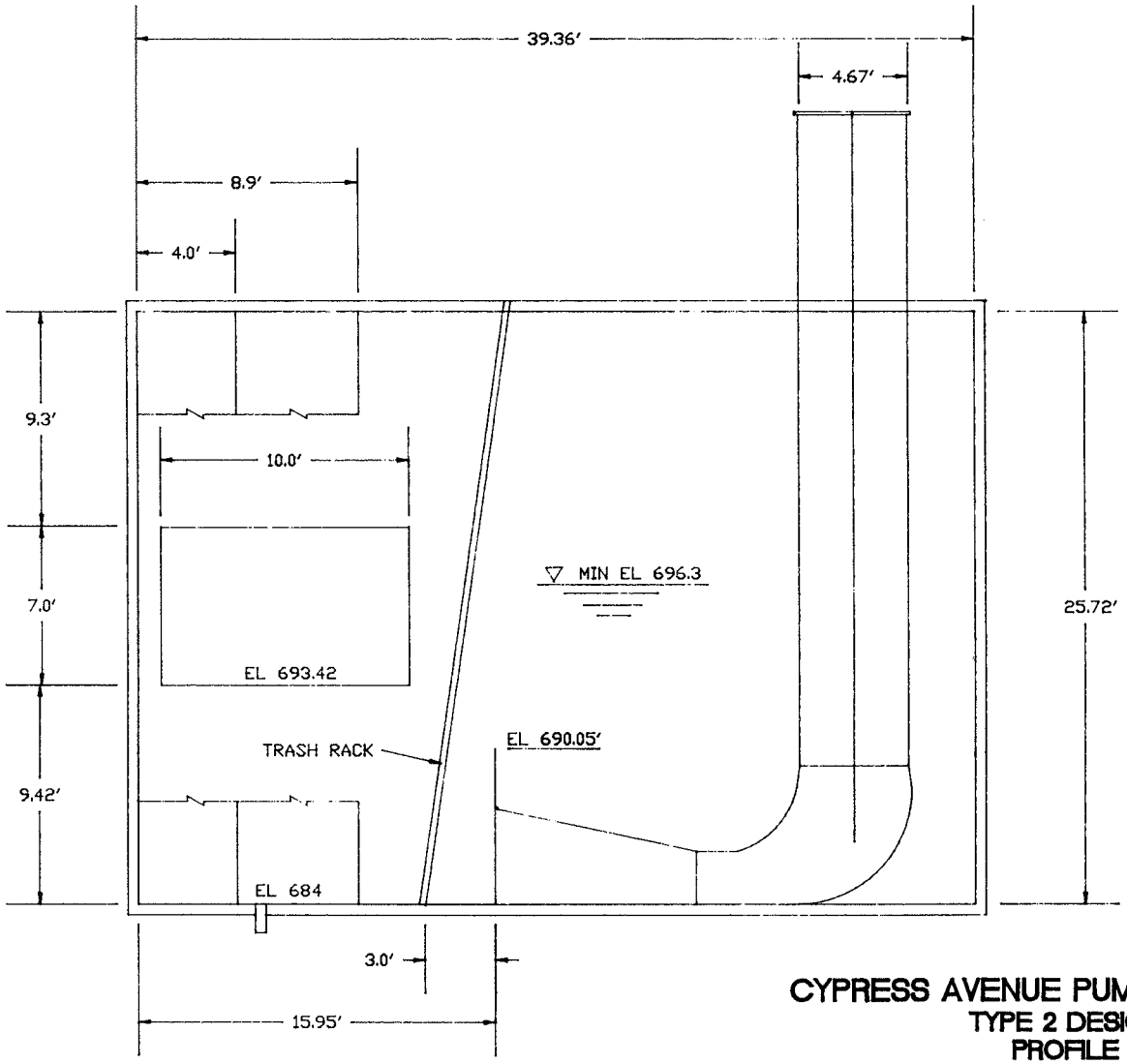

CYPRESS AVENUE PUMPING STATION
TYPE 2 DESIGN
PROFILE

Plate 10

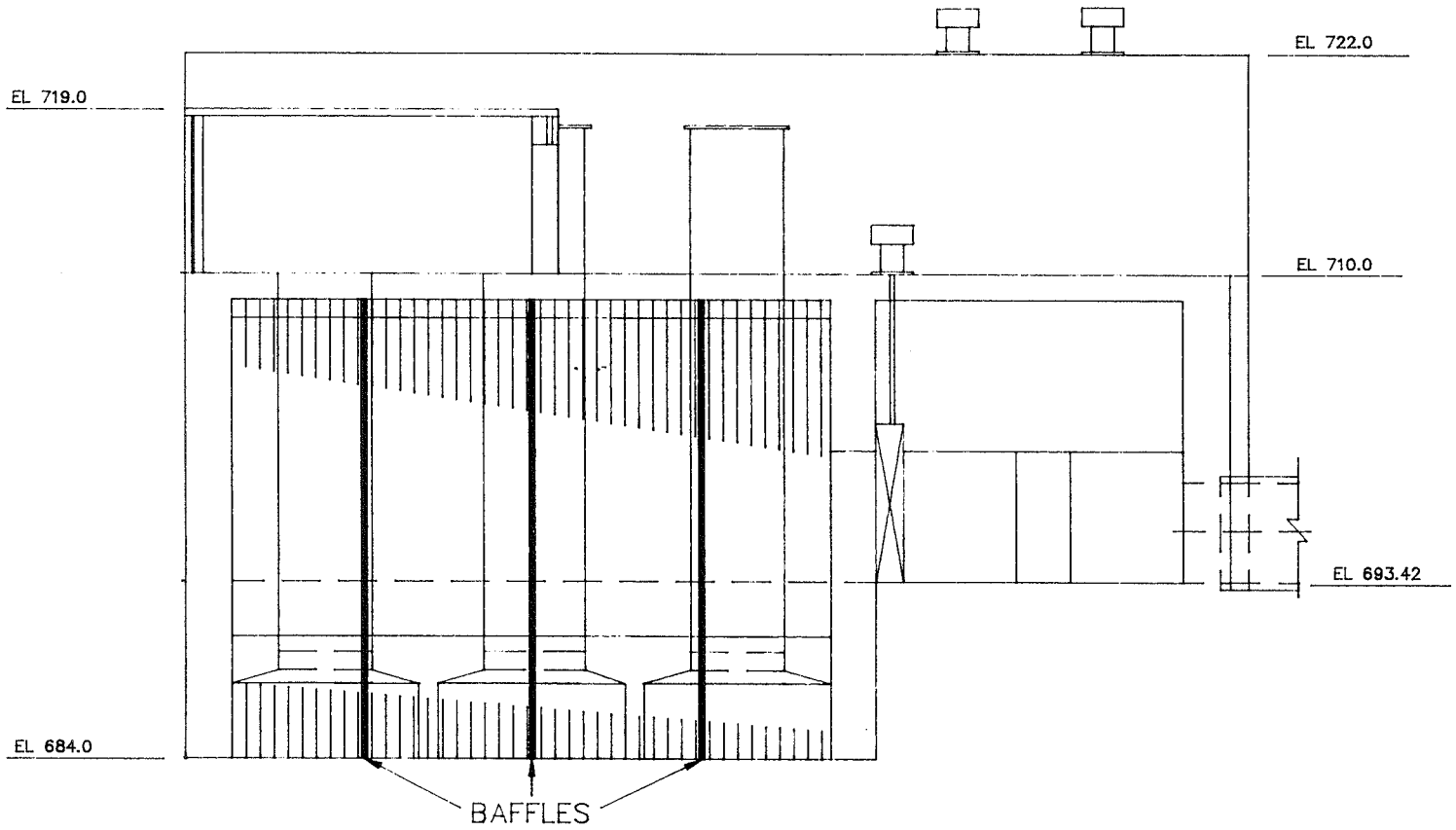

CYPRESS AVENUE PUMPING STATION
TYPE 2 DESIGN
ELEVATION

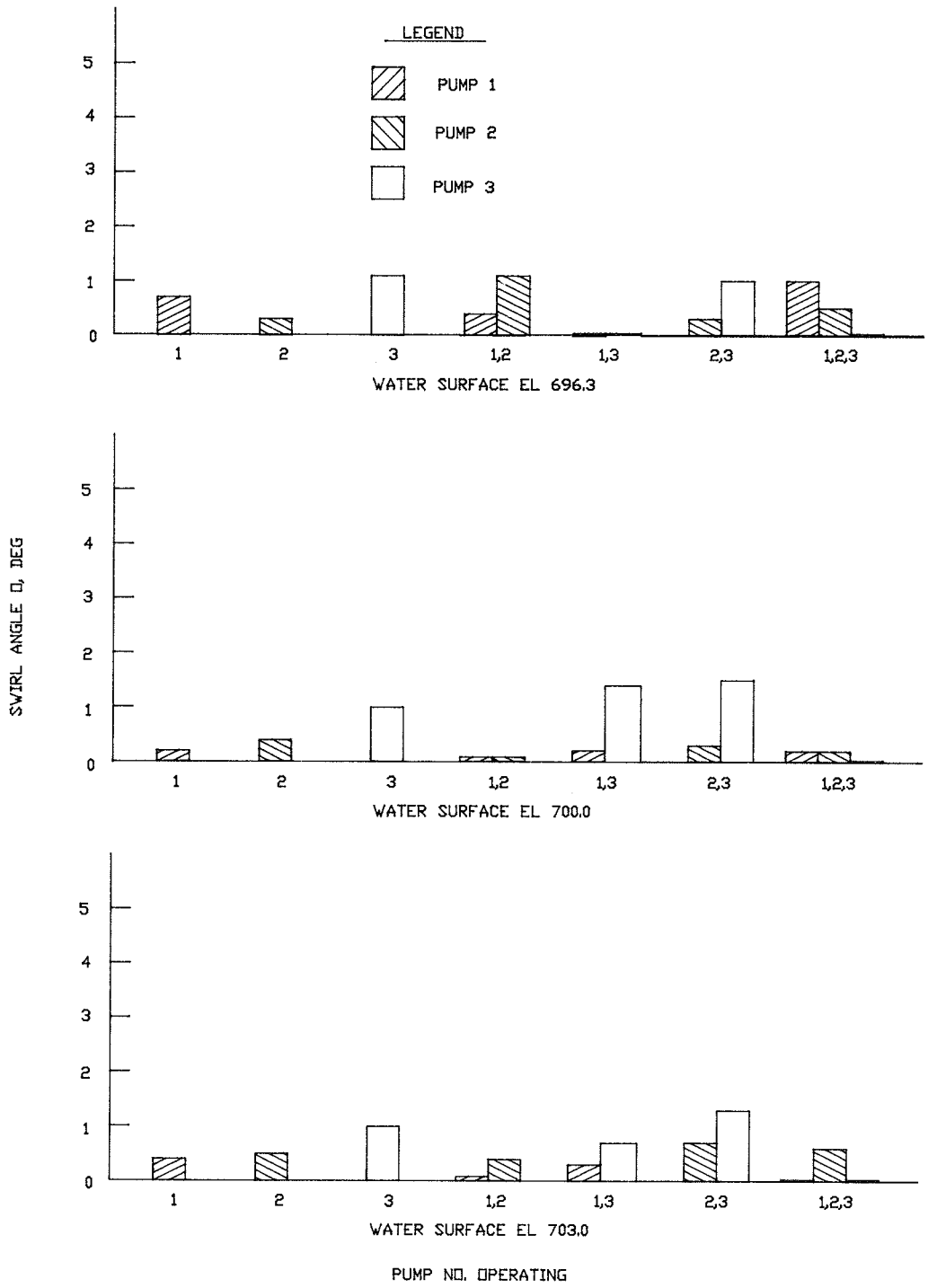

SWIRL ANGLE

TYPE 2 DESIGN
DISCHARGE PER PUMP 134 CFS
FLOW THRU RECTANGULAR CONDUIT - 50%
FLOW THRU CIRCULAR CONDUIT - 50%

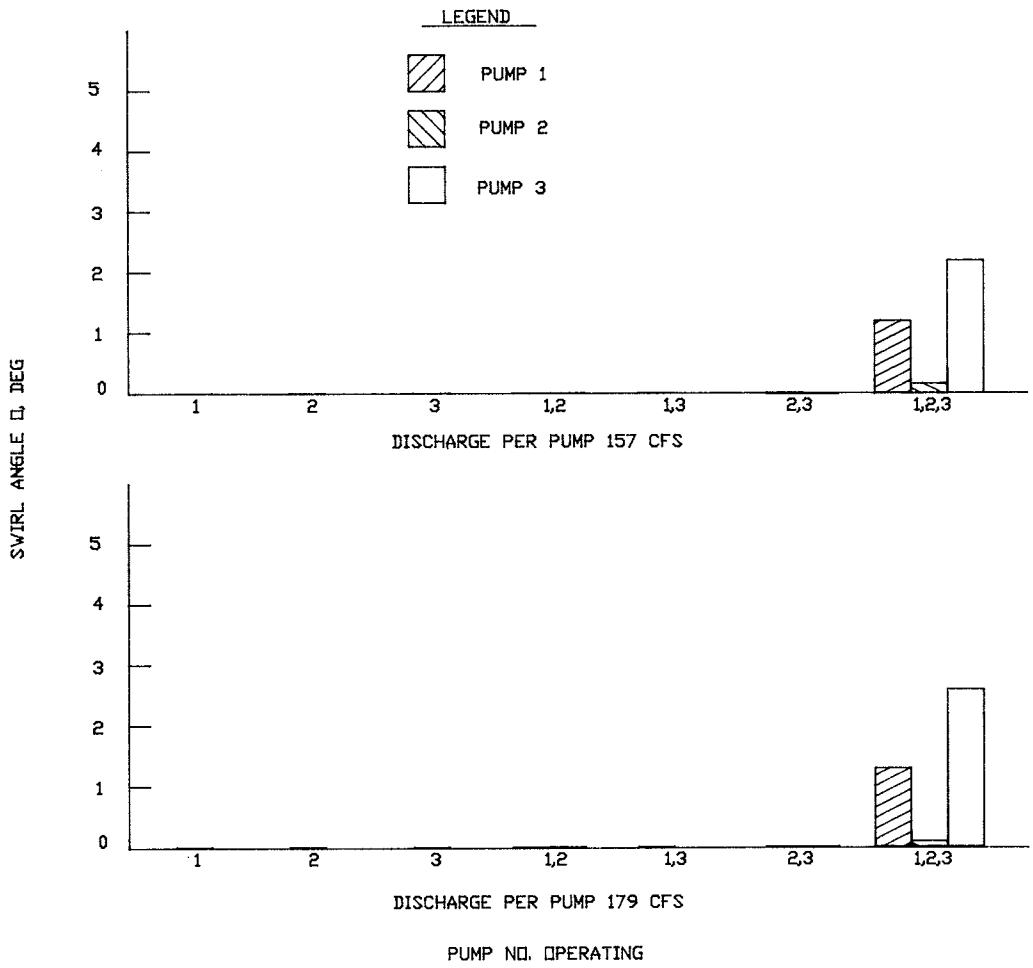

SWIRL ANGLE
TYPE 2 DESIGN
WATER SURFACE EL 700.3
FLOW THRU RECTANGULAR CONDUIT - 50%
FLOW THRU CIRCULAR CONDUIT - 50%

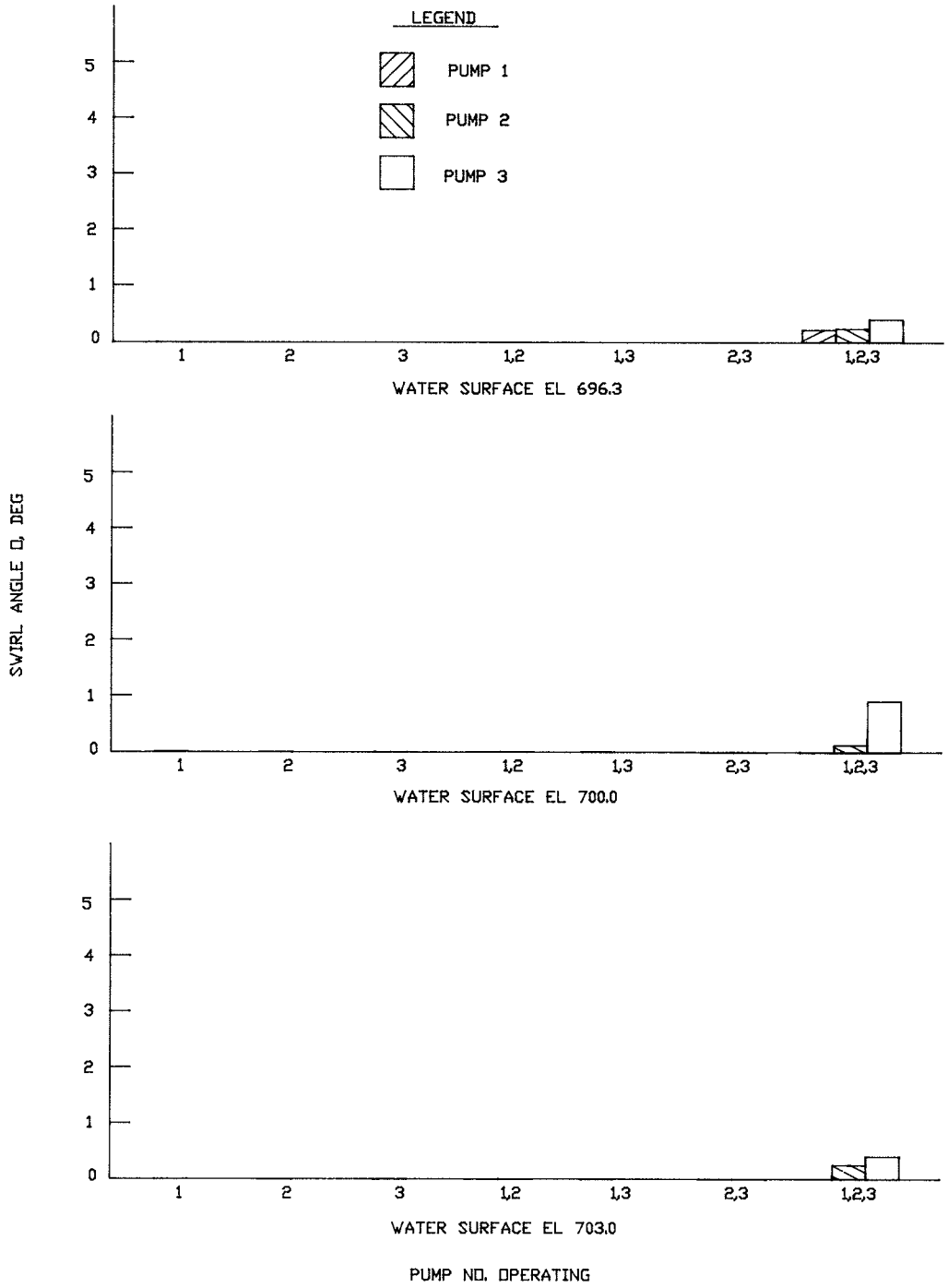

SWIRL ANGLE

TYPE 2 DESIGN

DISCHARGE PER PUMP 134 CFS

FLOW THRU RECTANGULAR CONDUIT - 100%

FLOW THRU CIRCULAR CONDUIT - 0%

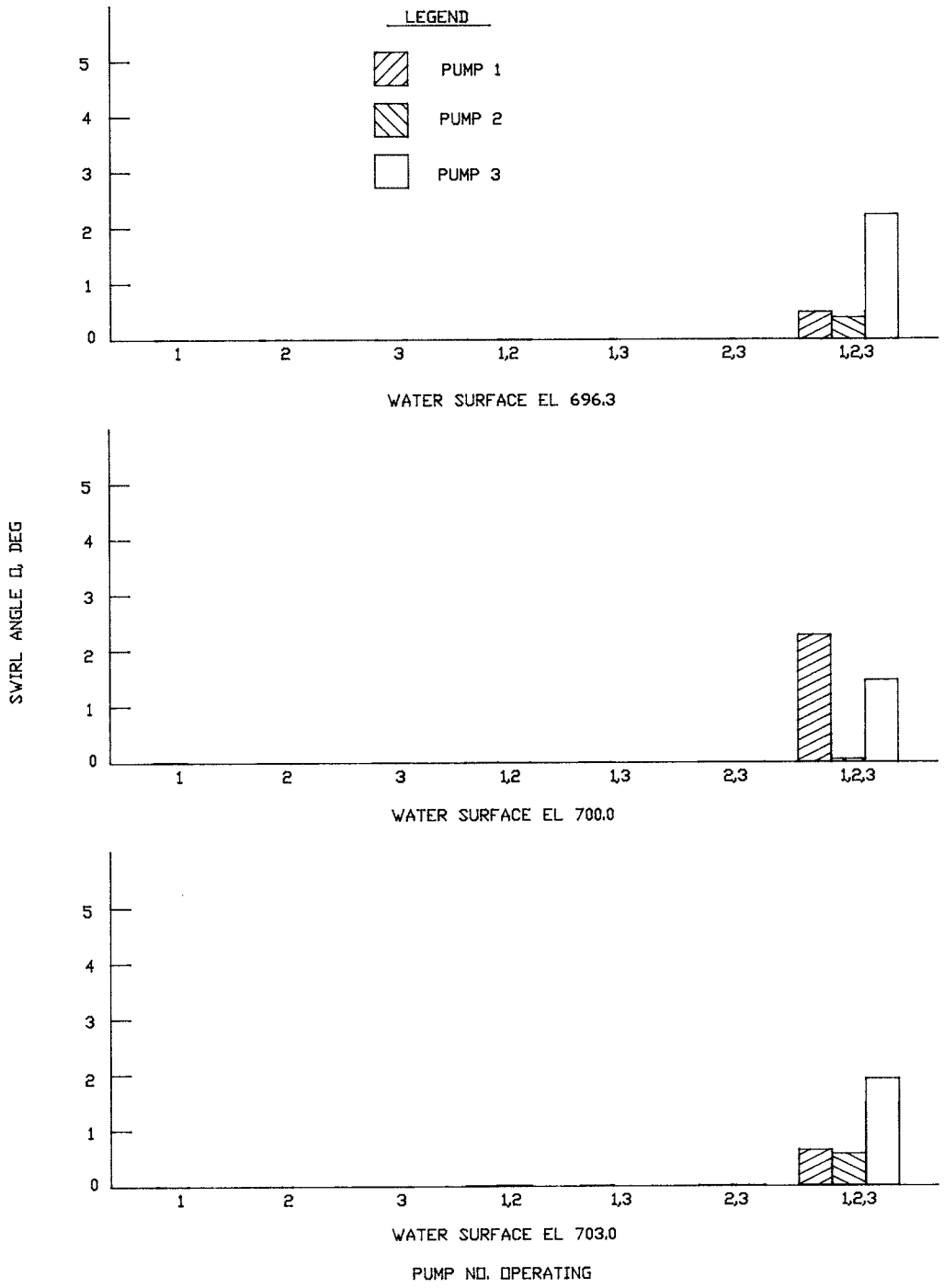

SWIRL ANGLE

TYPE 2 DESIGN

DISCHARGE PER PUMP 134 CFS

FLOW THRU RECTANGULAR CONDUIT - 0%

FLOW THRU CIRCULAR CONDUIT - 100%

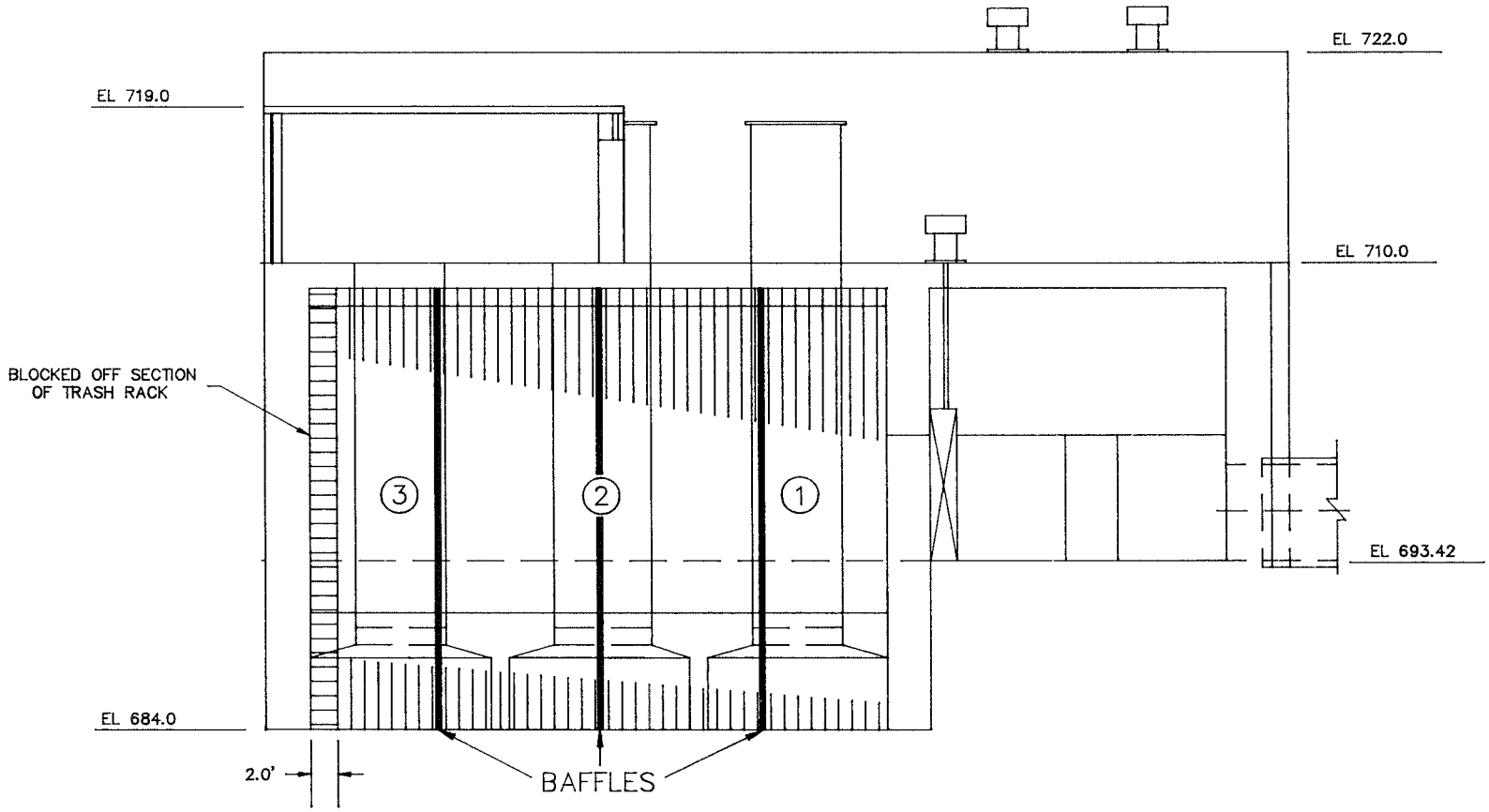

CYPRESS AVENUE PUMPING STATION
TYPE 2 DESIGN
ELEVATION
TRASH RACK PARTIALLY BLOCKED

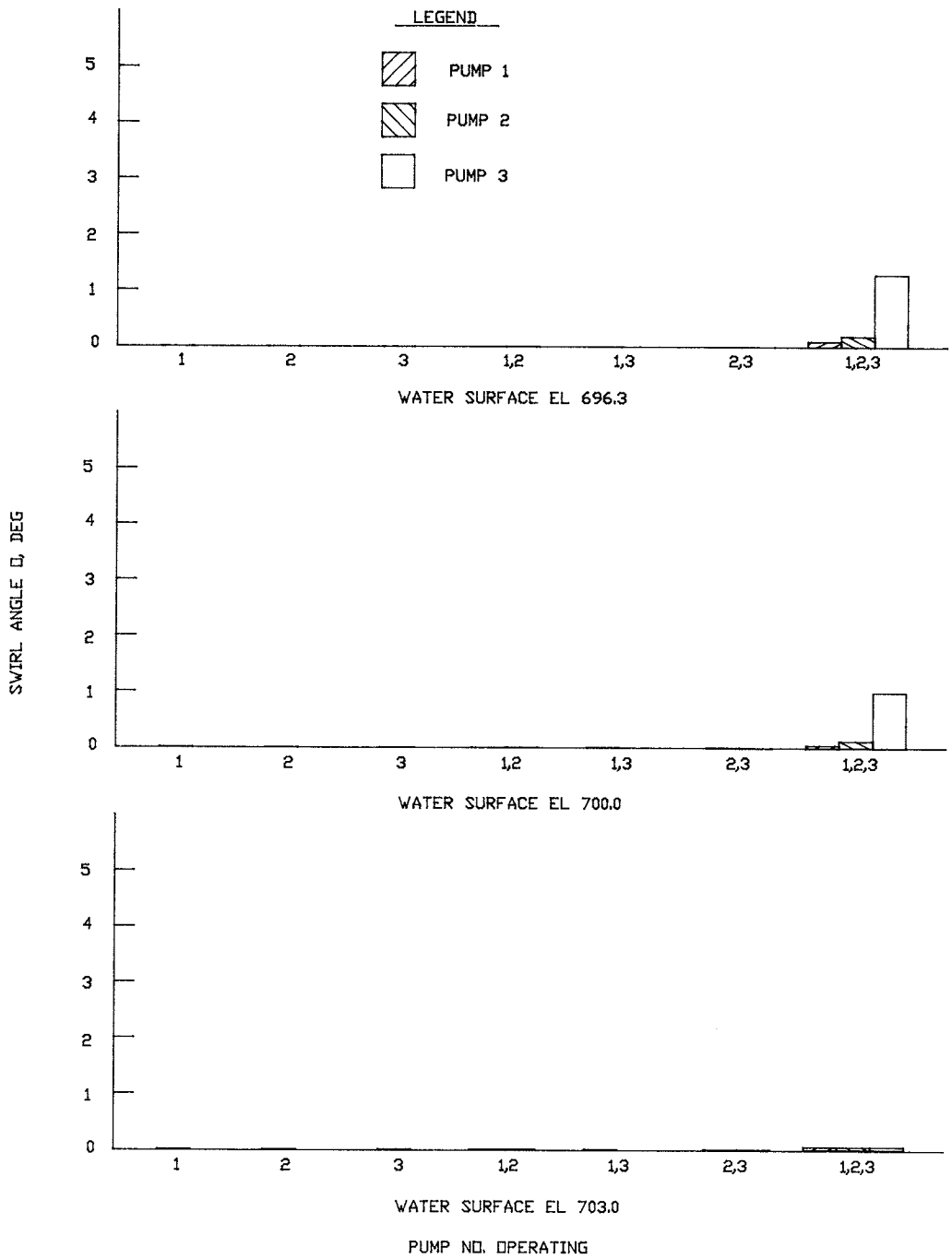

SWIRL ANGLE

TYPE 2 DESIGN
DISCHARGE PER PUMP 134 CFS
TRASH RACK PARTIALLY BLOCKED
FLOW THRU RECTANGULAR CONDUIT - 50%
FLOW THRU CIRCULAR CONDUIT - 50%

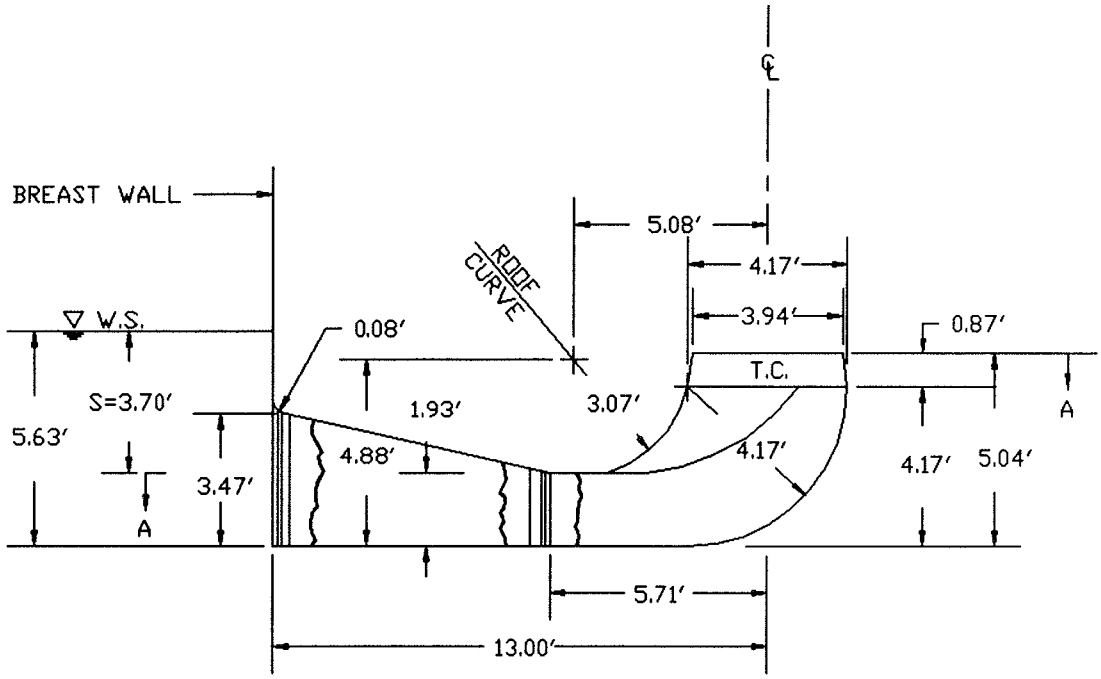

ELEVATION

T.C. = TRUNCATED CONE
S = MINIMUM SUBMERGENCE

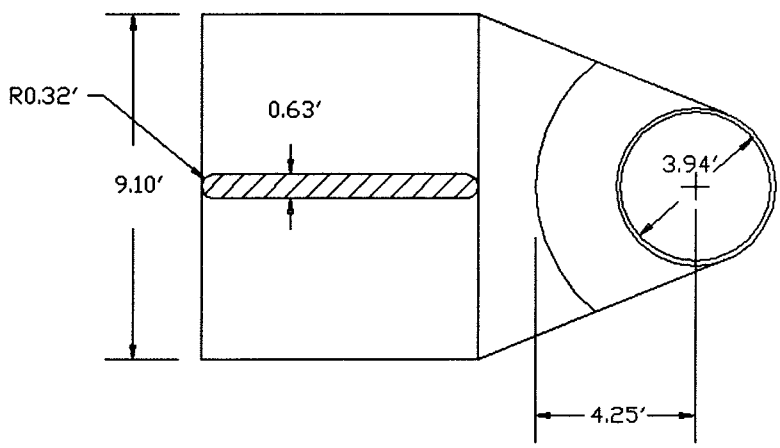

SECTION A-A

CYPRESS AVENUE PUMPING STATION
FSI (d = 3.94′)

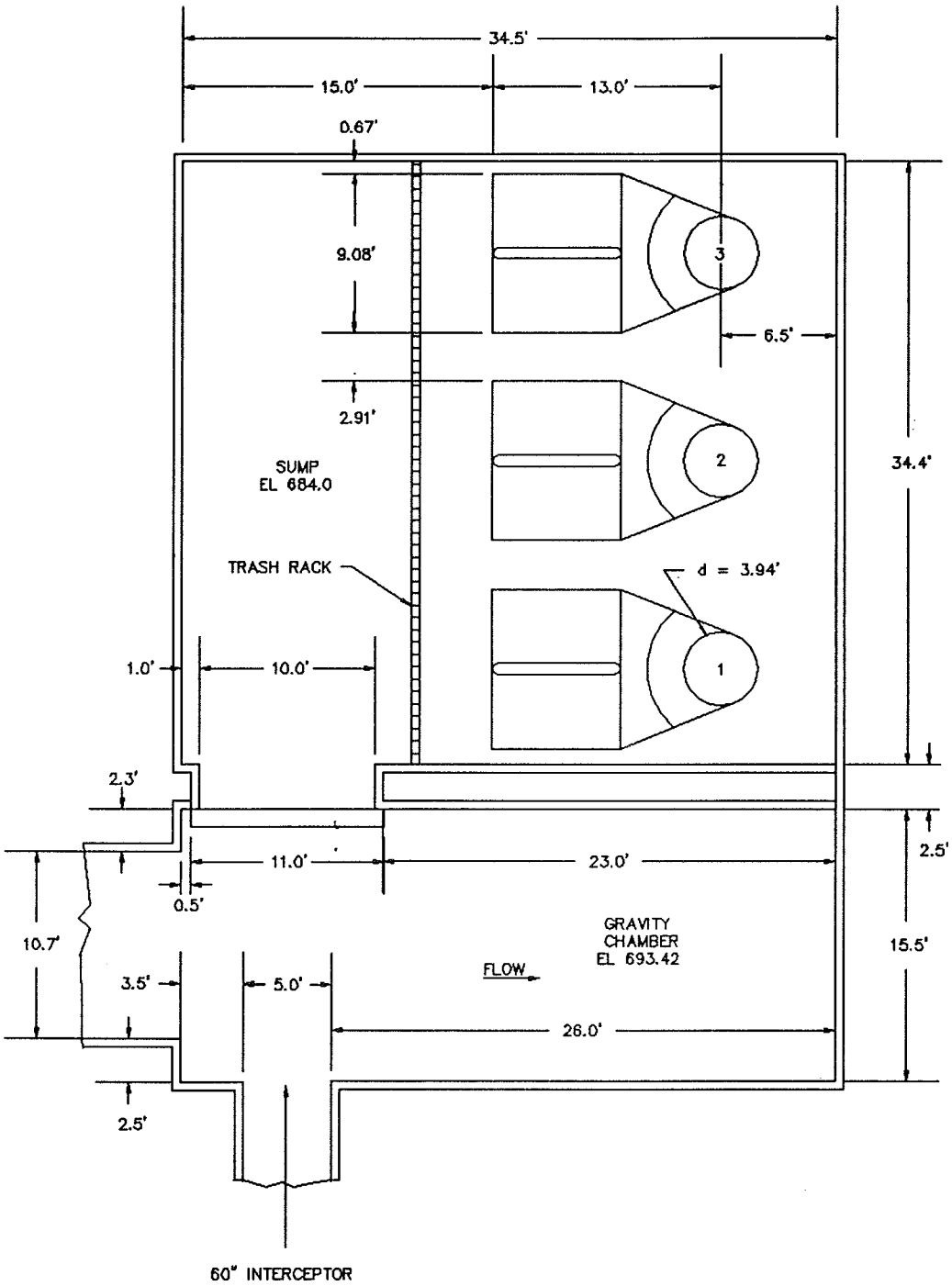

CYPRESS AVENUE PUMPING STATION
TYPE 3 DESIGN
PLAN

Plate 18

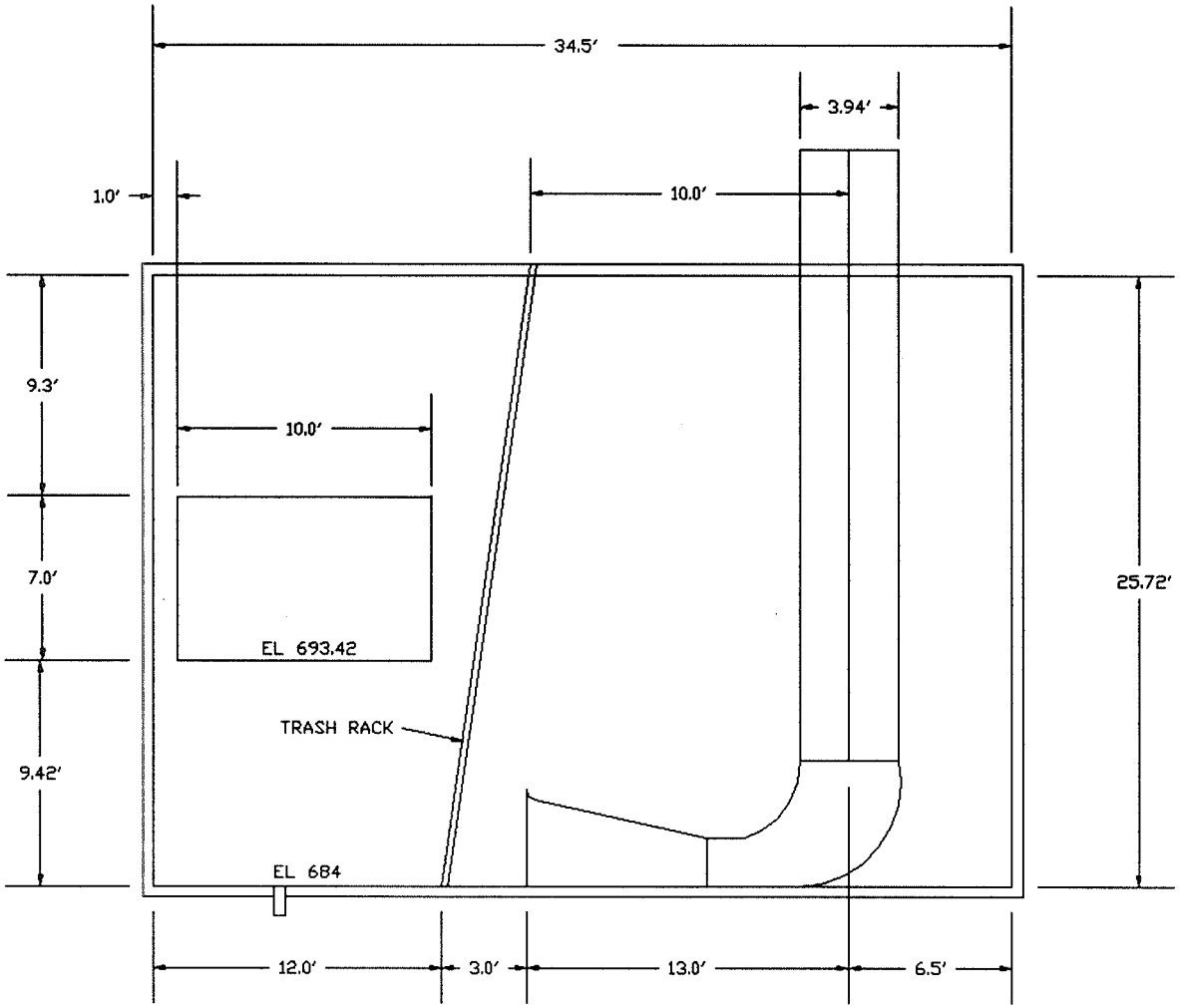

CYPRESS AVENUE PUMPING STATION
TYPE 3 DESIGN
PROFILE

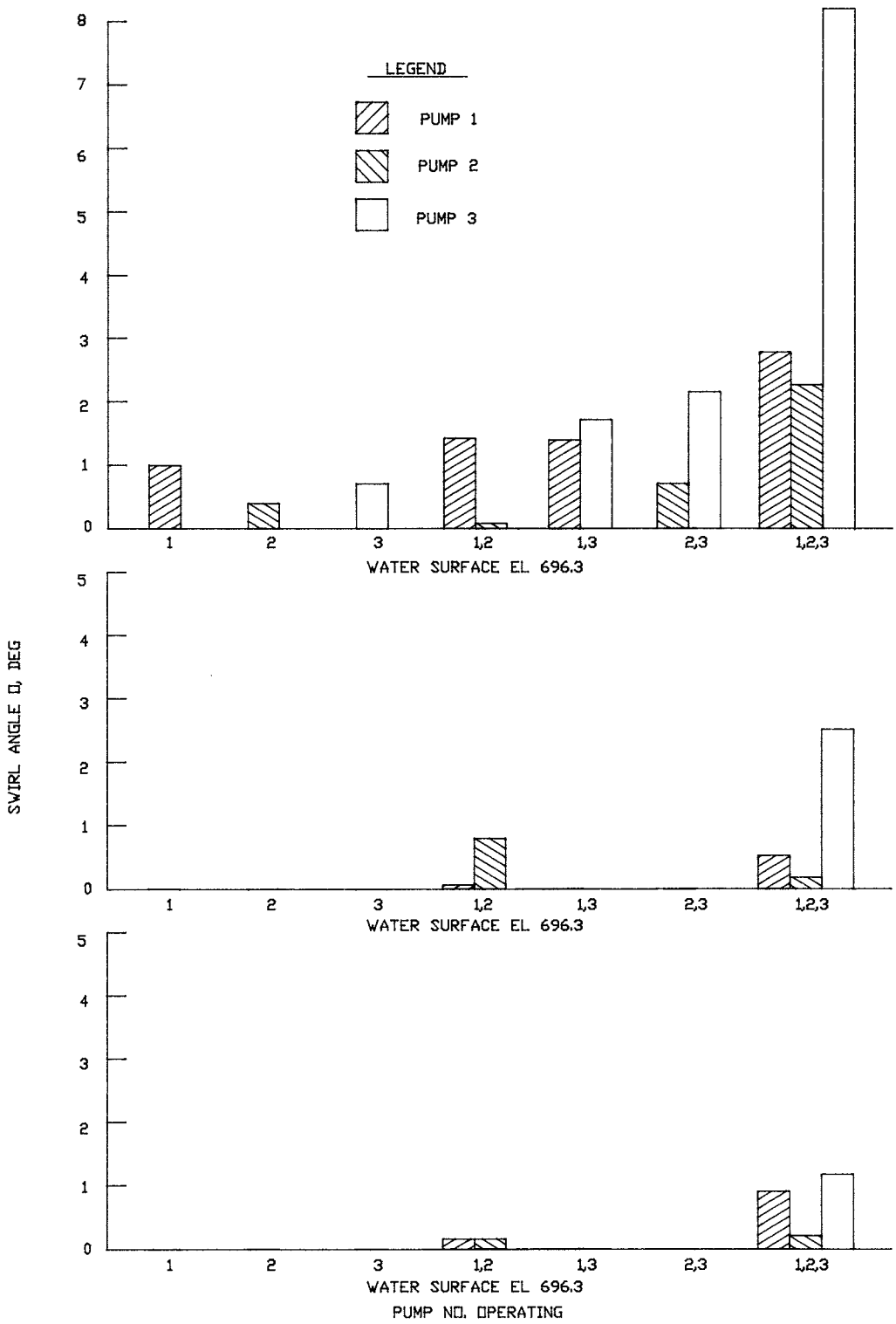

SWIRL ANGLE

TYPE 3 DESIGN

DISCHARGE PER PUMP 134 CFS

FLOW THRU RECTANGULAR CONDUIT - 50%

FLOW THRU CIRCULAR CONDUIT - 50%

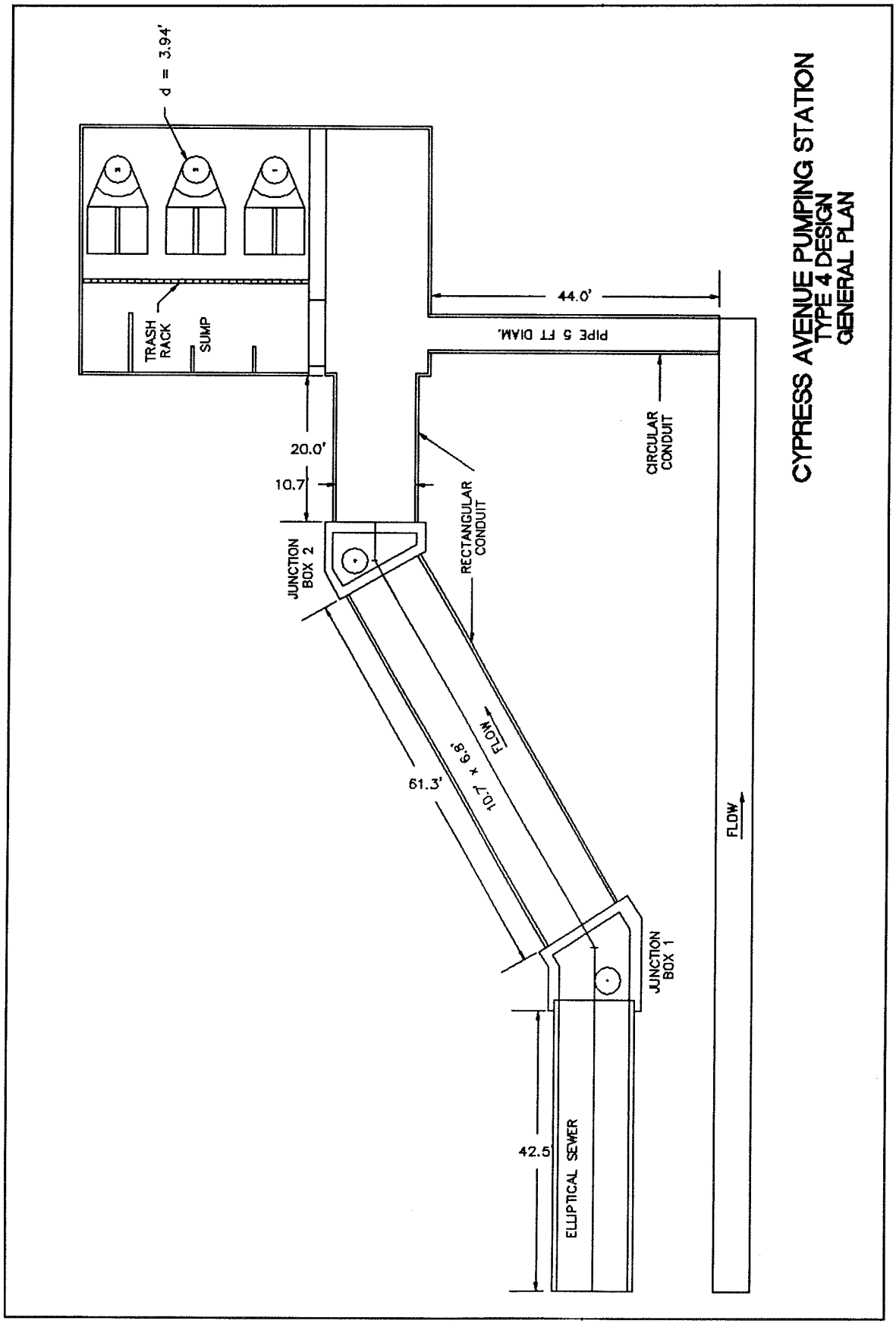

CYPRESS AVENUE PUMPING STATION
TYPE 4 DESIGN
GENERAL PLAN

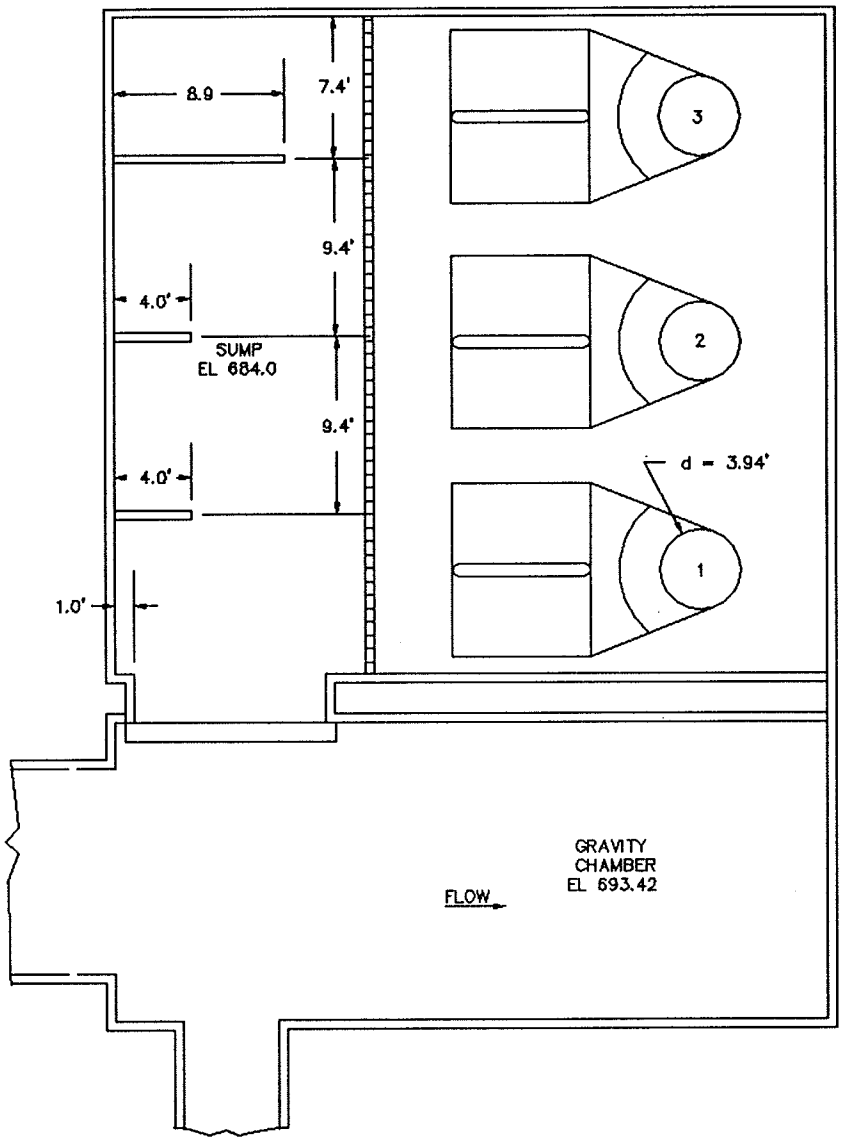

CYPRESS AVENUE PUMPING STATION
TYPE 4 DESIGN
PLAN

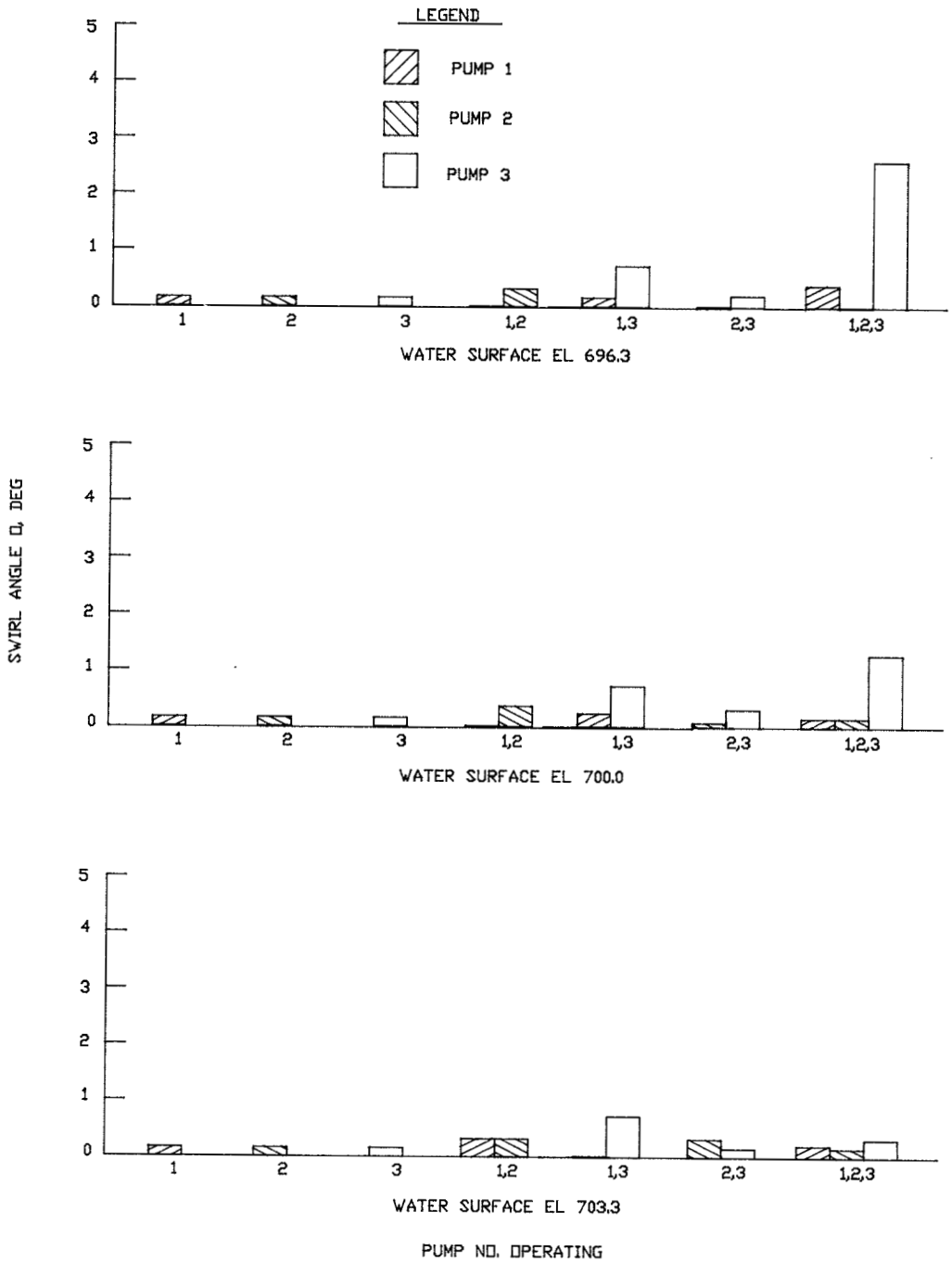

SWIRL ANGLE

TYPE 4 DESIGN
DISCHARGE PER PUMP 134 CFS
FLOW THRU RECTANGULAR CONDUIT - 50%
FLOW THRU CIRCULAR CONDUIT - 50%

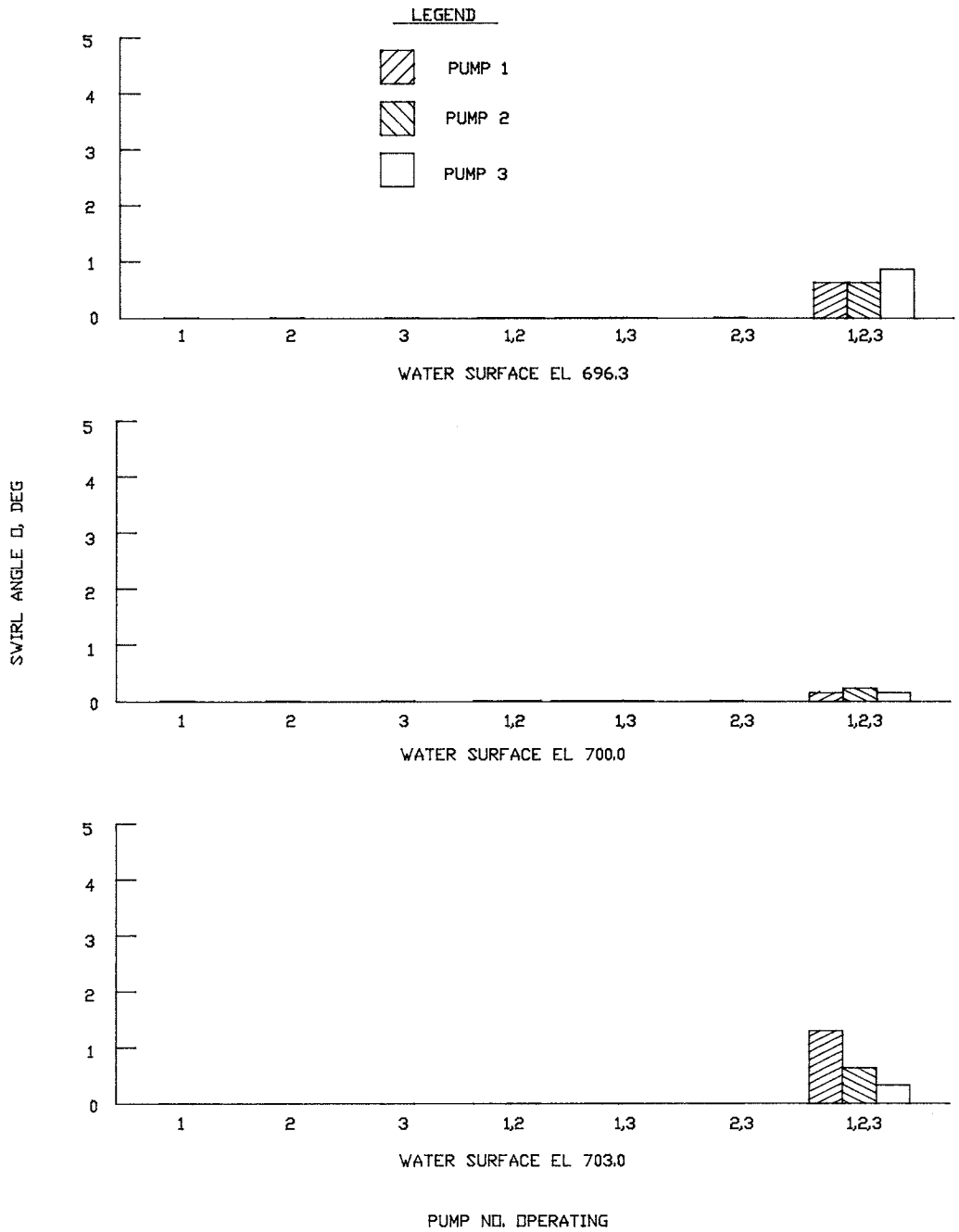

SWIRL ANGLE

TYPE 4 DESIGN

DISCHARGE PER PUMP 134 CFS

FLOW THRU RECTANGULAR CONDUIT - 100%

FLOW THRU CIRCULAR CONDUIT - 0%

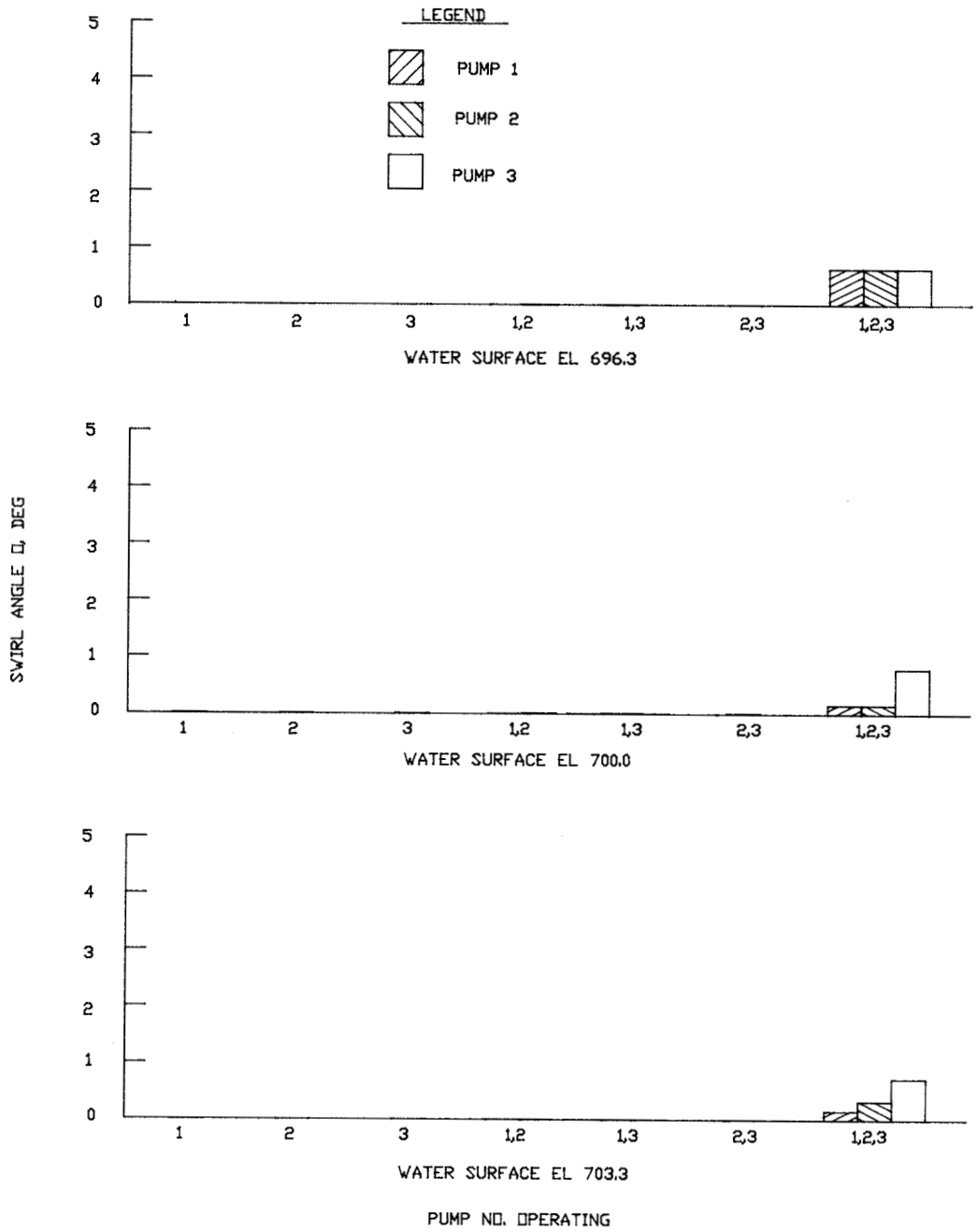

SWIRL ANGLE

TYPE 4 DESIGN
DISCHARGE PER PUMP 134 CFS
FLOW THRU RECTANGULAR CONDUIT - 0%
FLOW THRU CIRCULAR CONDUIT - 100%

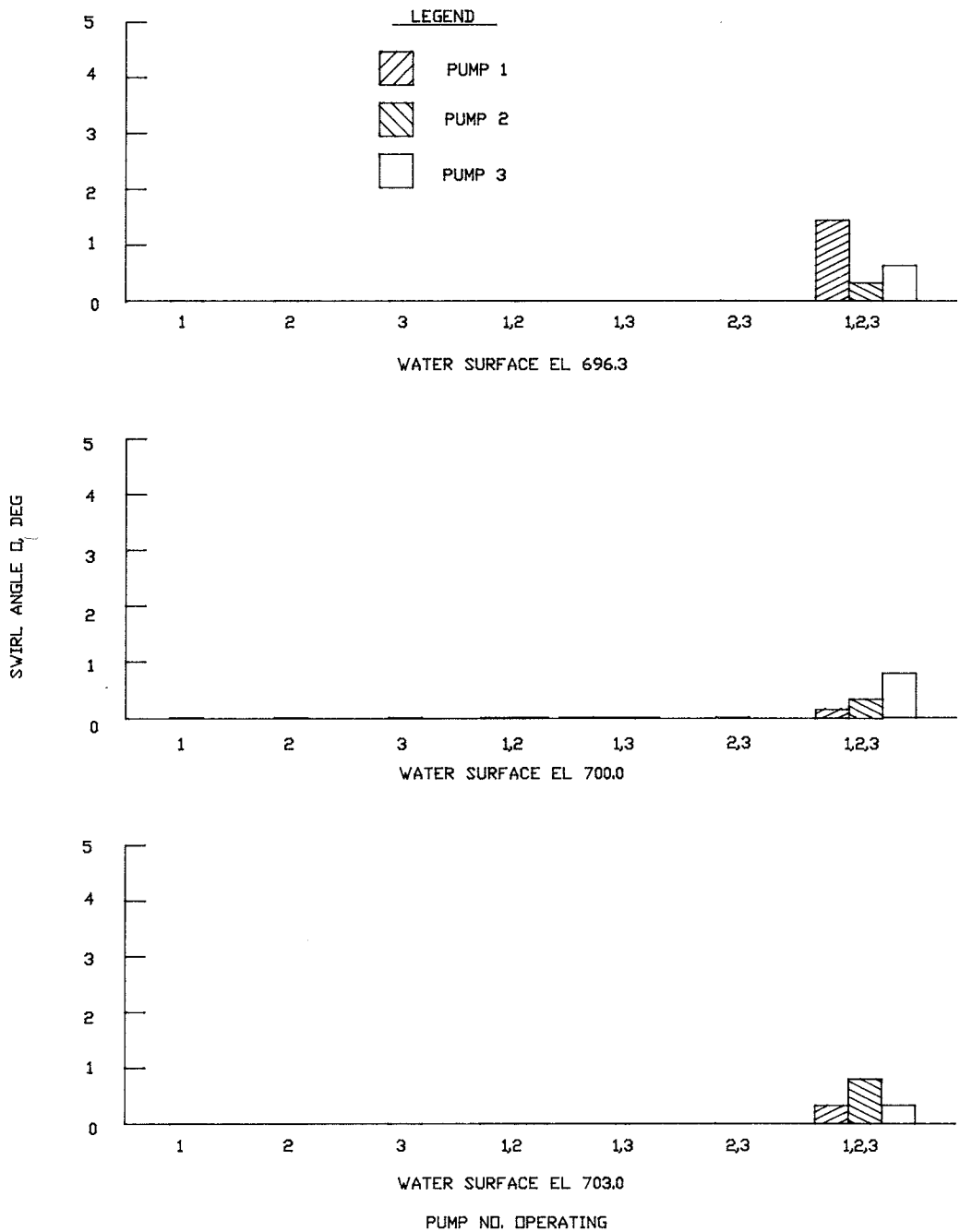

SWIRL ANGLE
TYPE 4 DESIGN
DISCHARGE PER PUMP 157 CFS
FLOW THRU RECTANGULAR CONDUIT - 50%
FLOW THRU CIRCULAR CONDUIT - 50%

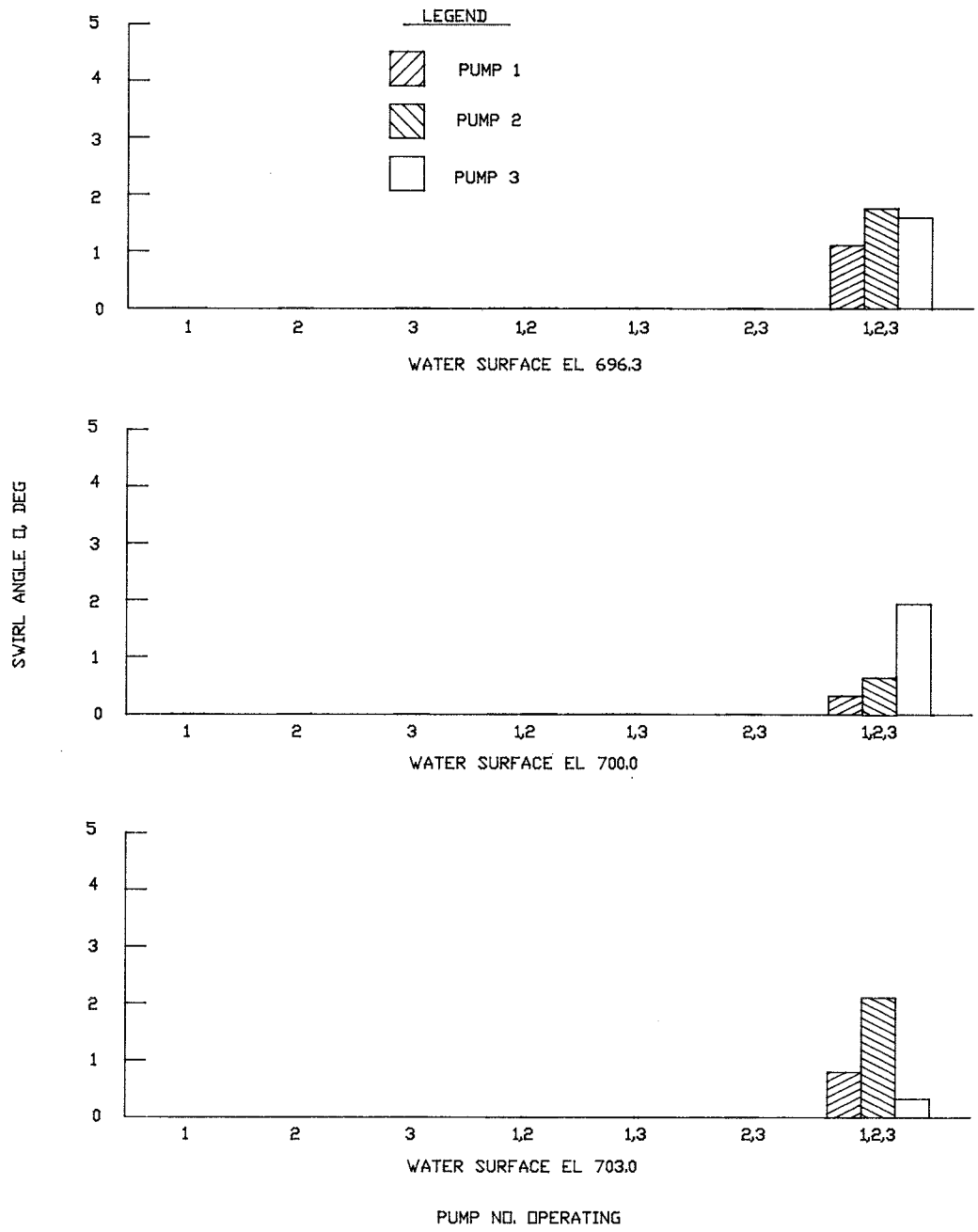

SWIRL ANGLE

TYPE 4 DESIGN

DISCHARGE PER PUMP 179 CFS

FLOW THRU RECTANGULAR CONDUIT - 50%

FLOW THRU CIRCULAR CONDUIT - 50%

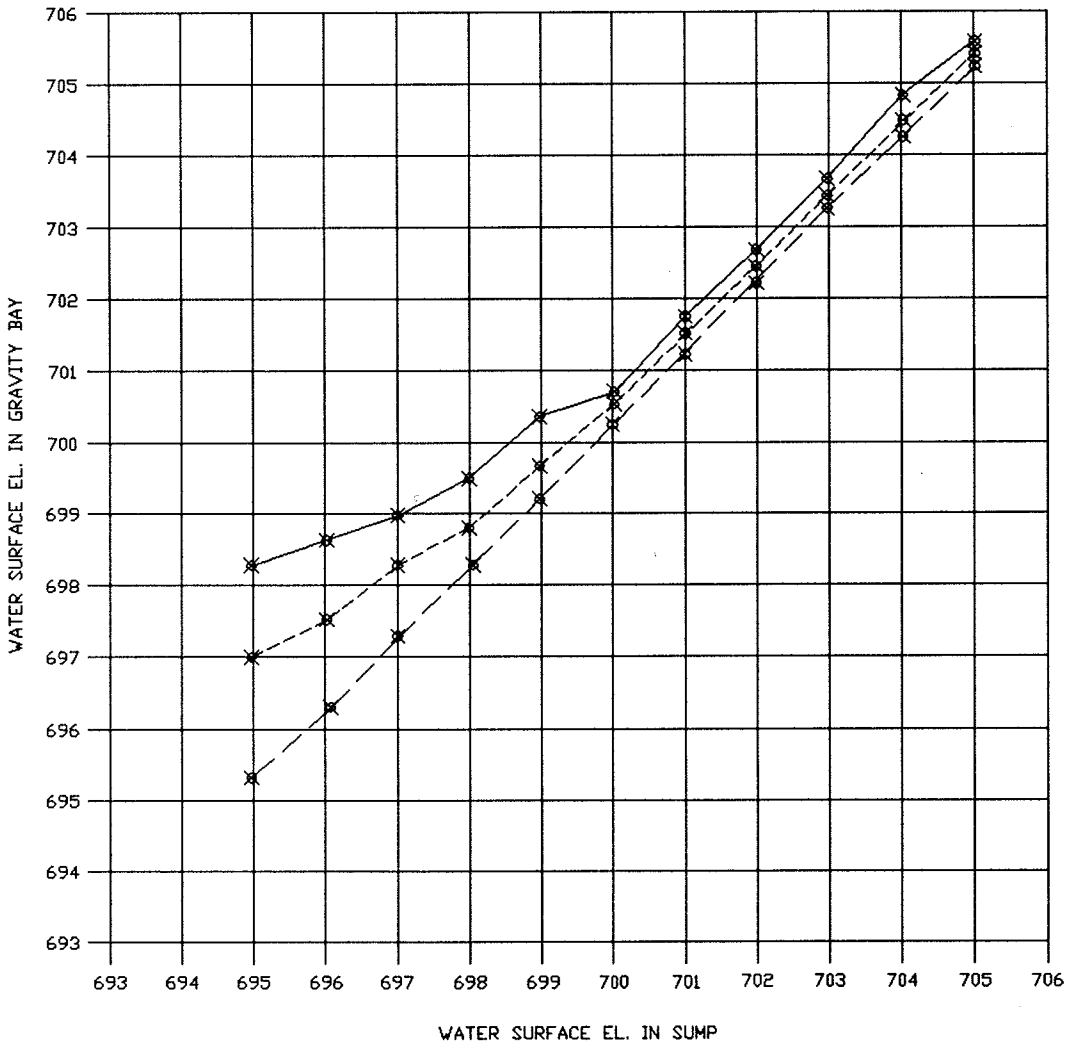

NOTE

DISCHARGE / PUMP = 134 CFS
NUMBER OF PUMPS OPERATING
3 PUMPS ————
2 PUMPS - - - - - -
1 PUMPS — — — —

CYPRESS AVE. PUMPING STA.
TYPE 4 DESIGN
WATER SURFACE DIFFERENTIAL
IN SUMP AND GRAVITY BAY

REPORT DOCUMENTATION PAGE

Form Approved
OMB No. 0704-0188

Public reporting burden for this collection of information is estimated to average 1 hour per response, including the time for reviewing instructions, searching existing data sources, gathering and maintaining the data needed, and completing and reviewing the collection of information. Send comments regarding this burden estimate or any other aspect of this collection of information, including suggestions for reducing this burden, to Washington Headquarters Services, Directorate for Information Operations and Reports, 1215 Jefferson Davis Highway, Suite 1204, Arlington, VA 22202-4302, and to the Office of Management and Budget, Paperwork Reduction Project (0704-0188), Washington, DC 20503.

1. AGENCY USE ONLY *(Leave blank)*

2. REPORT DATE
July 1994

3. REPORT TYPE AND DATES COVERED
Final report

4. TITLE AND SUBTITLE
Cypress Avenue Pumping Station; Hydraulic Model Investigation

5. FUNDING NUMBERS

6. AUTHOR(S)
Bobby P. Fletcher

7. PERFORMING ORGANIZATION NAME(S) AND ADDRESS(ES)
U.S. Army Engineer Waterways Experiment Station
3909 Halls Ferry Road, Vicksburg, MS 39180-6199

8. PERFORMING ORGANIZATION REPORT NUMBER
Technical Report HL-94-9

9. SPONSORING/MONITORING AGENCY NAME(S) AND ADDRESS(ES)
U.S. Army Engineer District, Huntington
502 8th Street
Huntington, WV 25701-2070

10. SPONSORING/MONITORING AGENCY REPORT NUMBER

11. SUPPLEMENTARY NOTES
Available from National Technical Information Service, 5285 Port Royal Road, Springfield, VA 22161.

12a. DISTRIBUTION/AVAILABILITY STATEMENT
Approved for public release; distribution is unlimited.

12b. DISTRIBUTION CODE

13. ABSTRACT *(Maximum 200 words)*

The model study was conducted to evaluate the characteristics of flow in the sump and pump intakes and to develop modifications required for reducing swirl in the flow approaching the pump intake. The three pumps were fitted with formed suction intakes (FSI).

The 1:11-scale model indicated the need for a minor modification (baffles in the sump) to reduce current circulation in the sump, thereby reducing swirl in the flow approaching the pump propeller.

For all anticipated flow conditions, the recommended sump design will enable the FSIs to deliver stable and evenly distributed flow to the pump propellers.

14. SUBJECT TERMS

Pump intake	Sump
Submerged vortex	Swirl
Submergence	Vortices

15. NUMBER OF PAGES
52

16. PRICE CODE

17. SECURITY CLASSIFICATION OF REPORT	18. SECURITY CLASSIFICATION OF THIS PAGE	19. SECURITY CLASSIFICATION OF ABSTRACT	20. LIMITATION OF ABSTRACT
UNCLASSIFIED	UNCLASSIFIED		