Coastal Engineering Technical Note

COMPUTER PROGRAM: WAVTRANS (MACE-13)
WAVE TRANSMISSION BY OVERTOPPING

PROGRAM PURPOSE: An important step in the design of a rubble-mound breakwater is to estimate its functional performance in terms of its wave transmission characteristics. The microcomputer program WAVTRANS applies the method of Seelig (1980) to perform these estimates, given a breakwater cross-section geometry and information on the incident wave conditions.

PROGRAM CAPABILITY: WAVTRANS is written in Microsoft BASIC and uses U.S. customary, metric, or nautical units. The program applies input data on incident significant wave height, peak spectral period, cotangent of the seaward slope, breakwater crest width, total structure height above sea floor, still water depth and onshore wind velocity (optional) to estimate transmitted wave heights of 50, 33.3, 10, and 1 percent and other specified exceedance probabilities during the specified sea state.

PROGRAM APPLICATION: The technique proposed by Seelig (1980) is applied to estimate wave transmission by overtopping for rubble-mound breakwaters which can be assumed to be impermeable (i.e., wave transmission through the breakwater is neglected). While this assumption provides sufficient accuracy for planning and preliminary design purposes for many rubble-mound breakwater cross sections intended to provide wave protection, it should be noted that breakwaters with high freeboard and very porous core material may also transmit substantial wave energy through the structure. WAVTRANS first estimates a potential runup on the seaward face of the structure, as if the slope is indefinitely high (see Figure 1), using the following relation developed by Ahrens and McCartney (1975):

$$R/H = (a \bullet \varepsilon)/(1 + b \bullet \varepsilon)$$

U. S. Army Engineer Waterways Experiment Station, Coastal Engineering Research Center
P. O. Box 631, Vicksburg, Mississippi 39180

LLED-CANCELLED-CANC

where

R = the estimated potential vertical runup height above the still water level on the specified slope

H = the incident wave height

ε = the surf similarity parameter (= $\tan\theta/\sqrt{(H/L_o)}$

$\tan\theta$ = tangent of seaward slope angle

L_o = equivalent deepwater wave length = $gT^2/2\pi$

g = acceleration of gravity

T = wave period

a & b = empirical runup coefficients for a particular slope material

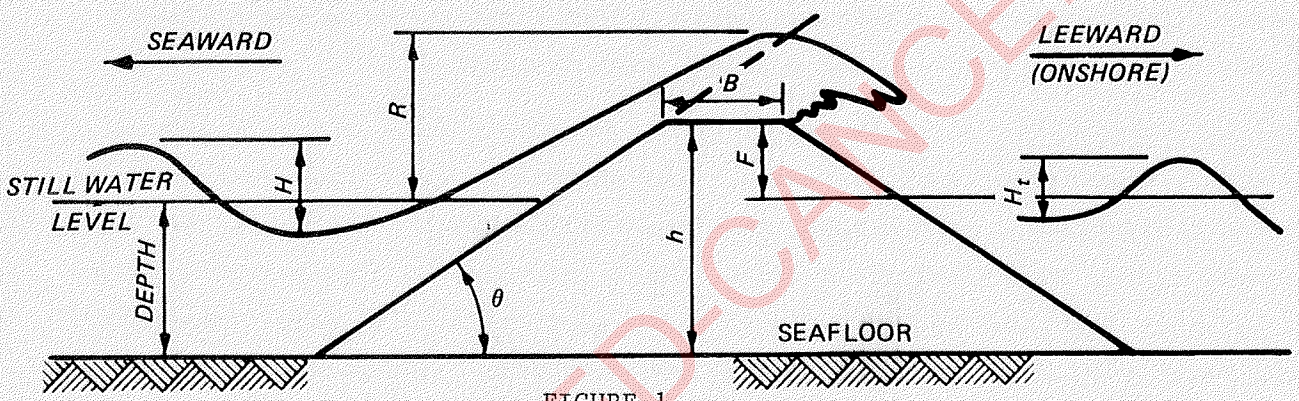

FIGURE 1

An optional adjustment for increased overtopping due to onshore winds is then made according to the following relation (SPM, 1984):

$$R' = k(R)$$

where

R' = the runup height as increased by the onshore wind

k = 1.0 + WF (((h-depth)/R) + 0.1) sin θ

WF = dimensionless windspeed coefficient

= $U^2/1800$ (U is the onshore windspeed in mph. Let WF = 2.0 for U = > 60 mph)

h = total structure height above the sea floor

LLED-CANCELLED-CANCELLED-CANC

The effect of irregular waves on runup, overtopping and wave transmission is estimated by the following modified runup formula, as discussed by Andrew and Smith (in preparation):

$$R_p = (H_p \bullet a \bullet \varepsilon_p)/(1 + b \bullet \varepsilon_p)$$

where

R_p = runup height of exceedance probability $p = P[R > R_p]$

$H_p = H_s\sqrt{(-\ln p)/2}$ (assuming a Rayleigh distribution of incident wave heights)

H_s = significant wave height of incident waves

$\varepsilon_p = \tan\theta/\sqrt{H_p/L_o}$

A conservative means of accounting for the wave period effect is to assume all periods equal to the period of peak energy density and compute L_o based on that value. Transmitted wave heights then are estimated corresponding to each incident wave height of exceedance probability p and its associated runup height by the transmission by overtopping relation developed by Seelig (1980):

$$H_{tp} = K_{to}(H_p)$$

where

H_{tp} = transmitted wave height where $p = P[H_t > H_{tp}]$

K_{top} = transmission coefficient
$= C(1-F/R_p)$

$C = .51 - 0.11\ (B/h)$

B = breakwater crest width

F = freeboard (h-depth

H_p = incident wave height where $p = P[H > H_p]$

LLED-CANCELLED-CANCELLED-CANC

INPUT:

1. Incident significant wave height (ft or m)
2. Peak spectral period (sec)
3. Cotangent of seaward slope
4. Breakwater crest width (ft or m)
5. Total structure height above the sea floor (ft or m)
6. Still water depth (ft or m)
7. Choice of slope material
8. Onshore wind velocity (optional) (mi/hr, knots, m/sec, or km/hr)
9. Specific exceedance probabilities (optional)

OUTPUT: A table is printed of incident and transmitted wave heights, and potential runup for 5 exceedance probabilities, along with the input data, in both U.S. customary and metric units. A more extensive tabulation and a line printer plot of transmitted wave heights and exceedance probability are optionally printed.

PROGRAM AVAILABILITY: The program WAVTRANS is available for the IBM PC on a 5 1/4-in. diskette or as a printed program listing and may be obtained from Ms. Gloria J. Naylor (601-634-2581 or FTS 542-2581) of the Engineering Computer Programs Library Section, U.S. Army Engineering Waterways Experiment Station, P.O. Box 631, Vicksburg, Mississippi 39180-0631. Questions concerning the applications of WAVTRANS can be directed to Mr. Orson P. Smith at 601-634-2013 (FTS 542-2013) or Mr. Doyle L. Jones at 601-634-2069 (FTS 542-2069), both of the Coastal Design Branch of the Coastal Engineering Research Center.

SAMPLE PROBLEM: A rubble-mound breakwater with uniform quarrystone armor has a 10 ft wide crest 20 ft above the sea floor with a seaward slope of 1:1.5. The incident significant wave height is 10 ft and the peak spectral period is 8 sec in 15 ft of water. The onshore wind velocity is 35 miles per hr. Estimate the distribution of transmitted wave heights and specifically the transmitted wave height with 7 percent probability of exceedance.

LLED-CANCELLED-CANCELLED-CANC

```
RUN
WAVE TRANSMISSION BY OVERTOPPING A RUBBLEMOUND BREAKWATER
AT VARYING LEVELS OF EXCEEDANCE PROBABILITY
DURING A SPECIFIED SEA STATE
WAVTRANS
VERSION 10-85
USE UPPER CASE FOR ALL RESPONSES
PRESS ANY KEY TO CONTINUE

HEIGHT AND DISTANCE MEASUREMENTS
FEET OR METERS (F OR M) ? F

SIGNIFICANT WAVE HEIGHT ? 10

PEAK SPECTRAL PERIOD (SECONDS) ? 8

COTANGENT OF SEAWARD SLOPE(=1.5 FOR 1 V:1.5 H) ? 1.5

BREAKWATER CREST WIDTH ? 10

TOTAL STRUCTURE HEIGHT ? 20

STILL WATER DEPTH ? 15

     SLOPE MATERIAL
 1 - RIPRAP (GRADED ROCK IMPERMEABLE SUBLAYER)
 2 - UNIFORM ROCK (HIGHLY PERMEABLE CORE)
 3 - UNIFORM ROCK (SUBLAYERS AND QUARRY RUN CORE)
 4 - DOLOSSE
 5 - MODIFIED CUBES
 6 - TETRAPODS
 7 - QUADRIPODS
 8 - HEXAPODS
 9 - TRIBARS
 10 - PLAIN CUBES

ENTER A VALUE 1 THROUGH 10 ? 1

IS ADJUSTMENT FOR ONSHORE WIND NEEDED (Y OR N) ? Y

     WINDSPEED UNITS
E-MILES/HOUR
N-KNOTS
M-METERS/SECOND
K-KILOMETERS/HOUR

WHAT UNIT ? E

ONSHORE WIND VELOCITY ? 35
==============================================================================
```


CANCELLED

```
OUTPUT ON SCREEN OR ON PAPER (S OR P) ? S
-----------------------------------------------------------------------------
SIGNIFICANT WAVE HEIGHT      = 10.0 FT =  3.0 M
BREAKWATER CREST WIDTH       = 10.0 FT =  3.0 M
TOTAL STRUCTURE HEIGHT       = 20.0 FT =  6.1 M
STILL WATER DEPTH            = 15.0 FT =  4.6 M
FREEBOARD                    =  5.0 FT =  1.5 M
PEAK SPECTRAL PERIOD         =  8   SECONDS
COTANGENT OF SEAWARD SLOPE   =  1.50
SLOPE MATERIAL               = RIPRAP (GRADED ROCK IMPERMEABLE SUBLAYER)
RUNUP COEFFICIENT          A = 0.956
RUNUP COEFFICIENT          B = 0.398
ONSHORE WIND VELOCITY        = 35.0 MPH   = 30.4 KN
                             = 15.6 M/SEC = 56.3 KM/HR
=============================================================================
    TRANSMITTED WAVE HEIGHT   INCIDENT WAVE HEIGHT   POTENTIAL RUNUP
% EXCEEDANCE        FT    M         FT      M            FT      M
-----------------------------------------------------------------------------
    1.0            5.4   1.6       15.2    4.6          22.8    6.9
   10.0            3.5   1.1       10.7    3.3          17.8    5.4
   13.5            3.2   1.0       10.0    3.0          16.9    5.2
   33.3            2.1   0.7        7.4    2.3          13.7    4.2
   50.0            1.5   0.5        5.9    1.8          11.6    3.5
-----------------------------------------------------------------------------

DO YOU WISH TO SEE PLOT OF MORE PROBABILITIES (Y OR N) ? Y

-----------------------------------------------------------------------------
SIGNIFICANT WAVE HEIGHT      = 10.0 FT =  3.0 M
BREAKWATER CREST WIDTH       = 10.0 FT =  3.0 M
TOTAL STRUCTURE HEIGHT       = 20.0 FT =  6.1 M
STILL WATER DEPTH            = 15.0 FT =  4.6 M
FREEBOARD                    =  5.0 FT =  1.5 M
PEAK SPECTRAL PERIOD         =  8   SECONDS
COTANGENT OF SEAWARD SLOPE   =  1.50
SLOPE MATERIAL               = RIPRAP (GRADED ROCK IMPERMEABLE SUBLAYER)
RUNUP COEFFICIENT          A = 0.956
RUNUP COEFFICIENT          B = 0.398
ONSHORE WIND VELOCITY        = 35.0 MPH   = 30.4 KN
                             = 15.6 M/SEC = 56.3 KM/HR
=============================================================================
```

LLED-CANCELLED-CANCELLED-CANC

% EXCEEDANCE	TRANSMITTED WAVE HEIGHT FT	TRANSMITTED WAVE HEIGHT M	INCIDENT WAVE HEIGHT FT	INCIDENT WAVE HEIGHT M	POTENTIAL RUNUP FT	POTENTIAL RUNUP M
1.0	5.4	1.6	15.2	4.6	22.8	6.9
5.0	4.1	1.3	12.2	3.7	19.5	6.0
10.0	3.5	1.1	10.7	3.3	17.8	5.4
15.0	3.1	0.9	9.7	3.0	16.6	5.1
20.0	2.8	0.8	9.0	2.7	15.7	4.8
25.0	2.5	0.8	8.3	2.5	14.9	4.5
30.0	2.3	0.7	7.8	2.4	14.1	4.3
35.0	2.1	0.6	7.2	2.2	13.5	4.1
40.0	1.9	0.6	6.8	2.1	12.8	3.9
45.0	1.7	0.5	6.3	1.9	12.2	3.7
50.0	1.5	0.5	5.9	1.8	11.6	3.5
55.0	1.4	0.4	5.5	1.7	11.1	3.4
60.0	1.2	0.4	5.1	1.5	10.5	3.2
65.0	1.0	0.3	4.6	1.4	9.9	3.0
70.0	0.9	0.3	4.2	1.3	9.3	2.8
75.0	0.7	0.2	3.8	1.2	8.6	2.6
80.0	0.6	0.2	3.3	1.0	7.9	2.4
85.0	0.4	0.1	2.9	0.9	7.1	2.2
90.0	0.2	0.1	2.3	0.7	6.2	1.9
95.0	0.0	0.0	1.6	0.5	5.0	1.5
99.0	0.0	0.0	0.7	0.2	3.4	1.0

TRANSMITTED WAVE HEIGHT

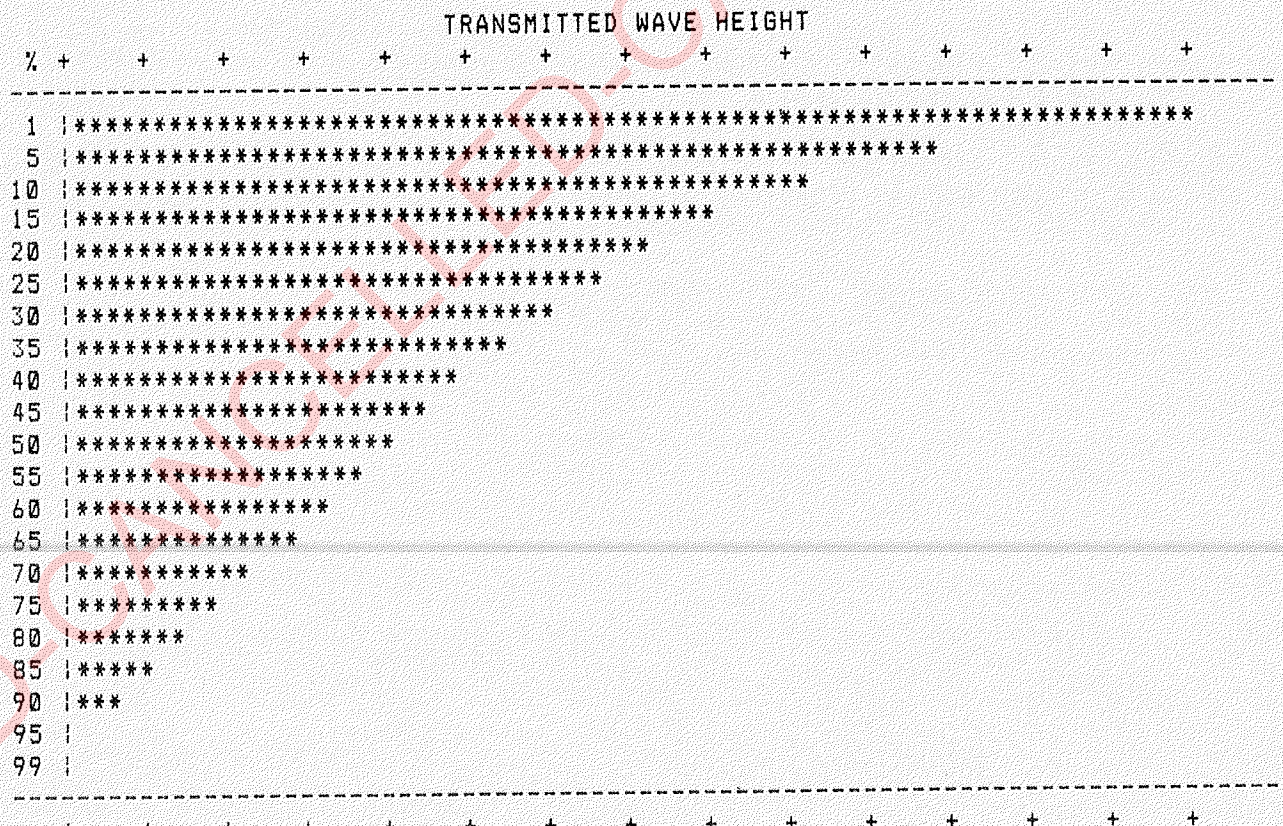

TRANSMITTED WAVE HEIGHT

LED-CANCELLED-CANCELLED-CANC

DO YOU WISH TO ESTIMATE TRANSMITTED WAVE HEIGHT FOR ANOTHER EXCEEDANCE PROBABILITY (Y OR N) ? Y

WHAT IS THE EXCEEDANCE PROBABILITY (PERCENT) ? 7

	TRANSMITTED WAVE HEIGHT		INCIDENT WAVE HEIGHT		POTENTIAL RUNUP	
% EXCEEDANCE	FT	M	FT	M	FT	M
7.0	3.8	1.2	11.5	3.5	18.7	5.7

DO YOU WISH TO ESTIMATE TRANSMITTED WAVE HEIGHT FOR ANOTHER EXCEEDANCE PROBABILITY (Y OR N) ? N

MORE DATA (Y OR N) ? N

REFERENCES:

Ahrens, J., and McCartney, B. 1975. "Wave Period Effect of the Stability of Riprap," Proceedings, Civil Engineering in the Oceans/III, American Society of Civil Engineers, New York, New York.

Andrew, M. E., and Smith, O. P. 1985. "Revised Method of Estimating Runup on Rough Slopes," U.S. Army Engineer Waterways Experiment Station, Vicksburg, Mississippi, (in preparation).

Seelig, W. N. 1980. "Estimation of Wave Transmission Coefficients for Overtopping of Impermeable Breakwaters," CERC CETA 80-7, U.S. Army Engineer Waterways Experiment Station, Vicksburg, Mississippi.

Shore Protection Manual. 1984. 4th ed., 2 vols, US Army Engineer Waterways Experiment Station, Coastal Engineering Research Center, US Government Printing Office, Washington, DC.

LLED-CANCELLED-CANCELLED-CANC