Coastal Engineering Technical Note

THE STREAMER SEDIMENT TRAP

PURPOSE: This Technical Note describes a portable sediment trap, called the Streamer Trap, developed for measuring the longshore sediment transport rate in the surf zone. The trap has the general capability to measure transport rates of sand-sized particles moving in any uni-directional fluid flow. A description of the Streamer Trap as well as techniques for application to the surf zone are presented.

INTRODUCTION: An estimate of the longshore sediment transport rate is required for designing coastal projects and evaluating their performance. Examples of applications that would benefit from direct measurement of the local longshore sediment transport rate are evaluations of weir design and performance, monitoring of beach fills, estimations of impoundment and erosion near structures, and estimations of bypassing at groins.

The Streamer Trap is a sediment-collecting device that has been employed in two major field data collection projects to measure longshore sediment transport rates on the open coast (Kraus and Dean, 1987). During a typical run designed to measure the total longshore sediment transport rate, several traps are deployed simultaneously across the surf zone for approximately five to ten minutes. They are then brought to shore, and the collected sediment is weighed and, in some cases, retained for additional analysis. Both vertical and horizontal distributions of the longshore sediment flux can be obtained. Summation of the distributions through the water column and across the surf zone yields an estimate of the total littoral transport rate. Use of this trap is limited to quasi-steady flows and beach material in the sand range of grain size.

DESCRIPTION OF THE STREAMER TRAP: The Streamer Trap consists of "socks" or streamers sewn of commercially available monofilament sieve cloth that are vertically mounted on a stainless steel frame (Figure 1). The recommended mesh size of the sieve cloth is 0.105 mm (3.25 ϕ), based on calibration tests. To ensure that the streamers remain open during sampling, individual streamers are attached to a metal entrance mouth or nozzle which can be released from the trap frame to facilitate removal and weighing of the collected sediment. Sediment particles of nominal diameter greater that that of the sieve cloth are collected in the streamers. The mesh size and nozzle configuration given here yield a hydraulic efficiency close to unity. If either parameter is changed, sediment trapping characteristics should be re-examined.

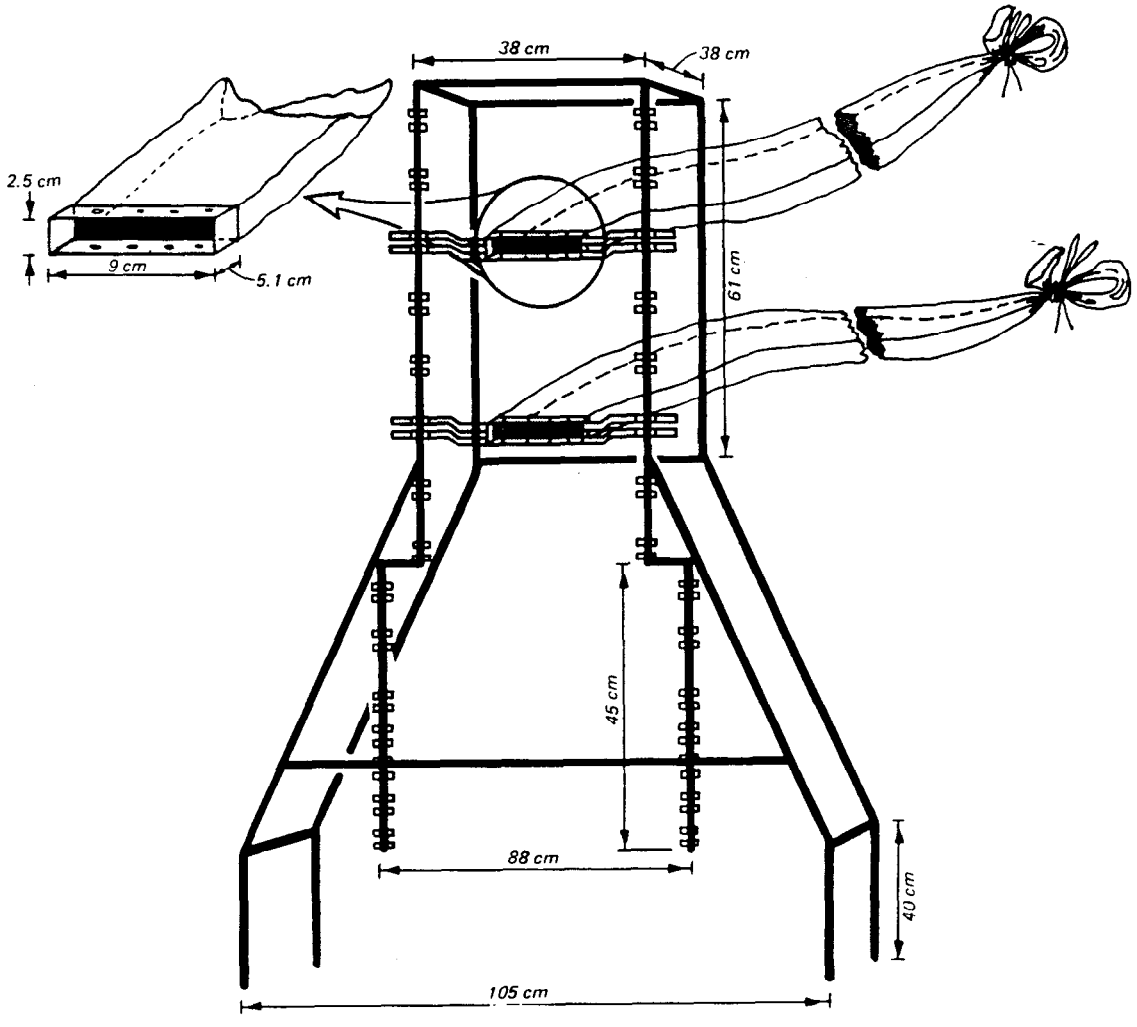

Figure 1. Diagram of the Streamer Trap

TRAP DEPLOYMENT METHODOLOGY: In typical field use, vertical poles or markers are placed in the surf zone prior to a sampling run to accurate positioning of the traps (Figure 2). Operators carry the traps to a designated location and align them such that the nozzles face into the longshore current. One operator is required for each trap, and traps have been deployed in surf zones with significant waves up to 1 m in height. It is important to stand downstream of the trap to avoid creating a scour cloud or blocking the flow of water and sediment into the trap. During a sampling interval of approximately five to ten minutes, the operator adjusts the trap as necessary to ensure that its legs are completely imbedded and that the bottom streamer nozzle rests evenly on the sea bed. The sampling interval is usually kept within this range to avoid excessive filling of the streamers, which would reduce trapping efficiency, and to minimize scour at the bottom streamer nozzle. Trap operators should note any excessive scour at the bed during a deployment in order to qualitatively estimate the accuracy of results. Details of trap construction and operation are given by Kraus (1987).

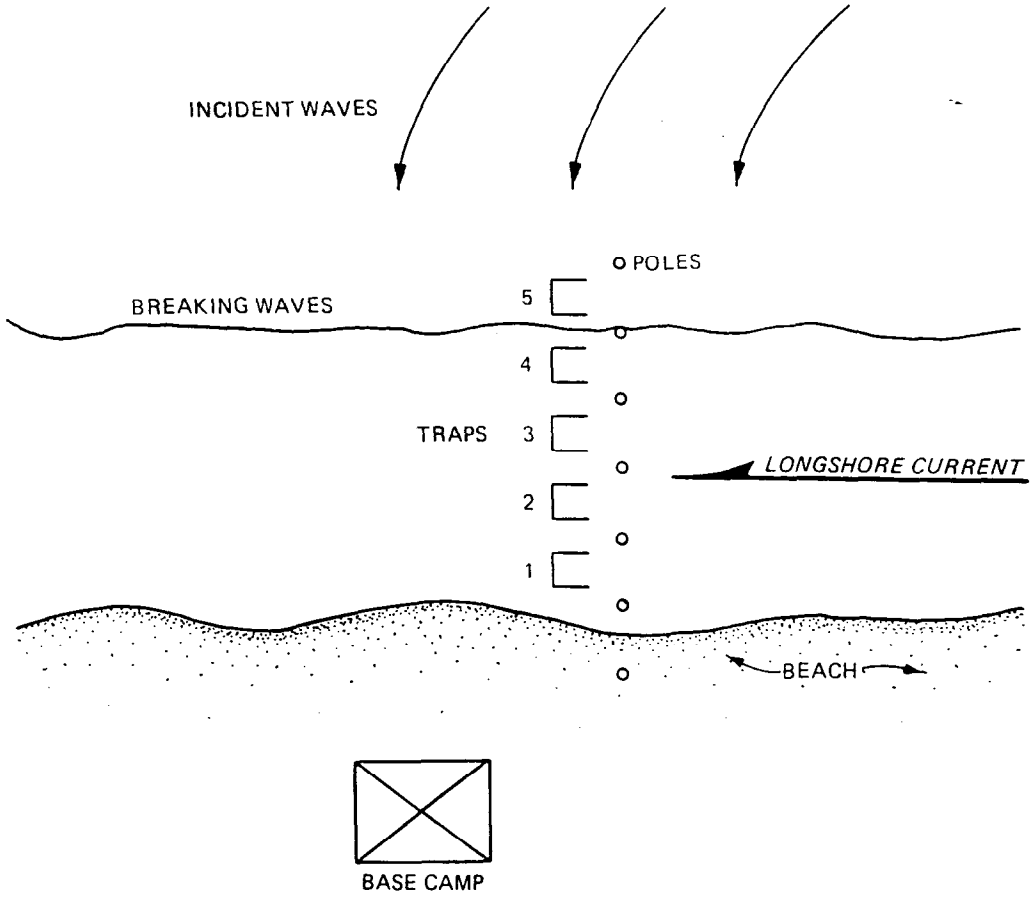

Figure 2. Example Arrangement for Measuring the Longshore Sediment Transport Rate Using the Streamer Trap.

After a sampling run is completed, the traps are carried to the beach camp for weighing of the collected sediment. Large plastic 110-liter containers (30-gallon trash barrels) filled with sea water have been used for washing the collected sediment down to the end of the streamer. The streamer is then carefully untied, and the sediment is washed into a colander or plastic sieve lined with sieve cloth. The sieve cloth enclosing the sediment is held and slightly shaken until the sample stops dripping. It was found by Kraus and Nakashima (1986) that a reliable linear relationship exists between the drip-free wet weight, WW, and dry weight, DW, of cohesionless sediment with grain sizes in the common range of beach sands (between 0.1 mm and 0.42 mm). This relationship is presented in Equation 1:

$$DW = \frac{WW}{C} \qquad (1)$$

where C is a coefficient with a value found to lie in the range of 1.2 - 1.3 for typical sand sizes. It is recommended that selected samples be retained for drying and weighing in the laboratory to calibrate the value of C for individual experiments. Since the value of C depends on subjective interpretation of the drip-free condition, it is also recommended that one person weigh the samples in the field so that any systematic error can be removed by the calibration.

CALCULATION OF SEDIMENT TRANSPORT RATES: Figure 3 defines the quantities used in the sediment transport rate calculation. The symbol S(I) represents the dry weight of sediment collected in streamer I for a given sampling time interval. The index I increases from I=1 at the sea bed to I=N, the number of streamers in the trap. The streamer width is w, h is the streamer height, and t is the sampling interval. Using these quantities, the sediment flux, F(I), at streamer I can be calculated using Equation 2:

$$F(I) = \frac{S(I)}{h \cdot w \cdot t} \qquad (2)$$

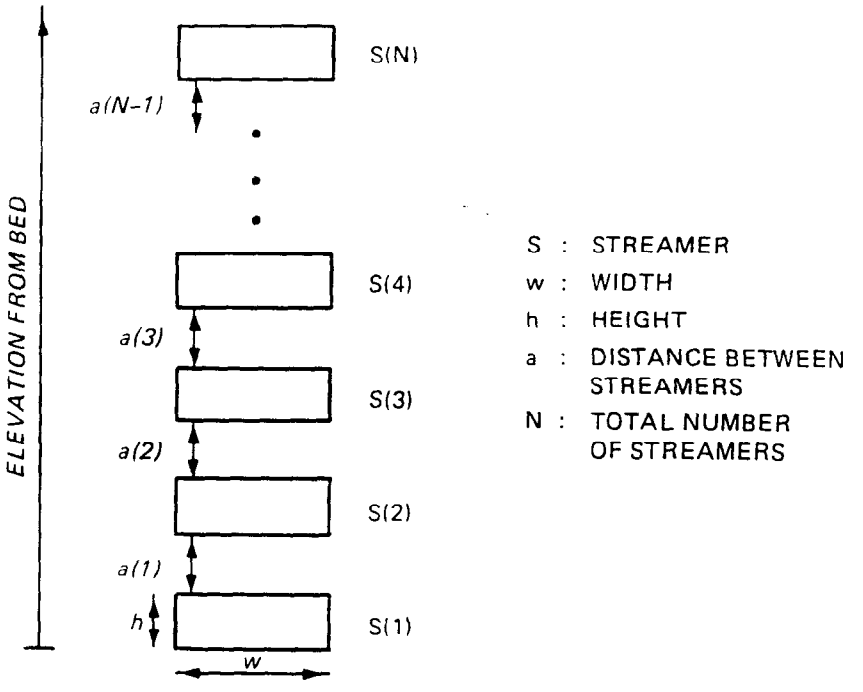

Figure 3. Definition Sketch for Calculation of Sediment Flux.

The sediment flux has units of sediment weight per unit area per unit time. Using the distance between neighboring streamers, a(I), as indicated in Figure 3, the estimated sediment flux between streamers, FE(I), can be obtained by linear interpolation using Equation 3:

$$FE(I) = 0.5 \cdot (F(I) + F(I+1)) \tag{3}$$

Let the index J denote the Jth trap from the shoreline. The total transport rate for the Jth trap crossing a line perpendicular to the direction of transport, RTRAP(J), can be calculated using Equation 4:

$$RTRAP(J) = h \sum_{I=1}^{N} F(I) + \sum_{I=1}^{N-1} a(I) \cdot FE(I) \tag{4}$$

The units of RTRAP are sediment weight per unit width of surf zone per unit time. Simultaneous deployment of several traps across the surf zone allows measurement of the lateral distribution of the longshore transport rate. The total longshore sediment transport rate across the surf zone can be calculated using the distances between traps, the trap rates RTRAP(J), and the trapezoidal rule applied over the distance between the shoreline and the average wave breaker line. Conversion from a rate expressed as dry weight

per unit time to volume per unit time can be accomplished by noting that 1 kg of dry quartz sand approximately occupies a volume of 6.3×10^{-4} m^3.. (In American customary units, 100 pounds of dry quartz sand occupies approximately 1 cubic foot.

Other applications of the Streamer Trap have been made, including measurement of the cross-shore transport rate in deep water and wind-blown sand.

ADDITIONAL INFORMATION: For further information on the Streamer Trap, contact Dr. Julie Dean Rosati, (251) 441-5535, Julie.D.Rosati@erdc.usace.army.mil.

REFERENCES:

Kraus, S. C., 1987. "Application of Portable Traps for Obtaining Point Measurements of Sediment Transport Rates in the Surf Zone," Journal of Coastal Research, Vol 3, No. 2, pp. 139 152.

Kraus, N. C. and Dean, J. L., 1987. "Longshore Sediment Transport Rate Distribution Measured by Trap," Proceedings of Coastal Sediments '87, American Society of Civil Engineers, pp. 881 896.

Kraus , N. C. and Nakashima, L., 1986. "Field Method for Determining Rapidly the Dry Weight of We Sand Samples," Journal of Sedimentary Petrology, Vol 56, No. 4, pp. 55-451.