ERDC/CHL CHETN-IX-27
October 2011

US Army Corps of Engineers®

Computational flow model of a reverse tainter valve

by E. Allen Hammack and Richard L. Stockstill

BACKGROUND: Reverse tainter valves are the most common valve type found on navigation locks constructed by the U.S. Army Corps of Engineers (Pickett and Neilson 1988 and Headquarters, U.S. Army Corps of Engineers 1975). Virtually all locks constructed in the United States since 1940 have had reverse tainter valves (Davis 1989). Reverse tainter valves differ from radial gates found on spillways in that the trunnions are upstream of the skin plate and the convex surface of the skin plate faces downstream and seals against the downstream end of the valve well. A typical reverse tainter valve layout is shown in Figure 1. This "reverse" orientation prevents large volumes of air from being drawn into the culvert at the valve well, thereby preventing dangerous surges in the lock chamber.

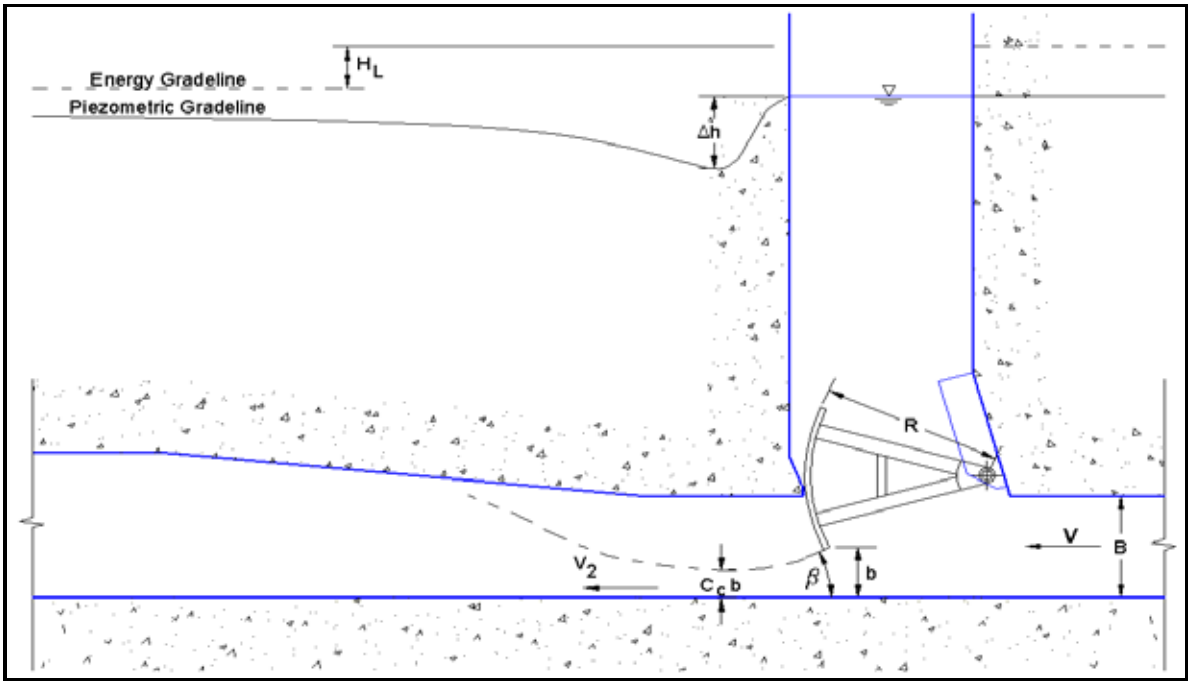

Figure 1. Geometric and hydraulic parameters describing a reverse tainter valve.

The geometric and hydraulic parameters describing a reverse tainter valve are shown in Figure 1. Lock culvert flow is controlled by rotating the valve about the trunnion axis. The valve position is listed commonly as the ratio b/B, where b is the distance from the valve lip to the culvert floor and B is the culvert height upstream and downstream of the valve. The average velocity in the culvert upstream of the valve is denoted as V, and V_2 is the velocity of the valve jet at its most contracted section. The minimum height of the jet is related to the valve opening by the contraction coefficient, C_c.

COMPUTATIONAL FLOW MODEL: Computational methods are beginning to be used to evaluate the hydraulic performance of lock components. These models require much less time and are, therefore, less expensive to use than conventional models. With computational models, information about the flow, such as the velocities and pressures, can be determined anywhere in the flow domain – not just at discrete points. Computational models can also be used to provide information about areas of a flow domain where measurements would not be possible.

To demonstrate a computational model's ability to reproduce the hydraulic characteristics of reverse tainter valves, a three-dimensional (3-D) model of a John Day Lock valve and filling culvert was constructed. John Day Lock and Dam, located in Oregon and Washington on the Columbia River near Portland, OR, is operated by the U.S. Army Corps of Engineers, Portland District. The design lift, 34.442 m (113 ft), is the largest of any lock in North America. The computational flow domain, which was 162 m long (531.5 ft), included the valve, the upstream and downstream culvert bulkhead slots, and the valve well (Figure 2). The model study concentrated on the valve, so other components of the filling and emptying system were not included. The inflow boundary was immediately downstream from the lock's intake. The conduit had a 33.528-m-long (110-ft) vertical transition, which dropped 17.067 m (56 ft) from the intake down to the 3.658-m (12-ft)-wide culvert. The conduit also contracted within this vertical transition from 9.144 m (30 ft) tall at the intake to 4.267 m (14 ft) tall at the end of the transition. The culvert was 3.658 m (12 ft) wide by 4.267 m (14 ft) tall at the valve. The roof, downstream of the valve, had a 1V on 10H transition from a culvert height of 4.267 m (14 ft) to a height of 6.096 m (20 ft). The outflow boundary was 137 m (about 30 hydraulic diameters) downstream of the roof transition. This culvert extension ensured that the outflow boundary did not affect the flow within the area of interest near the valve.

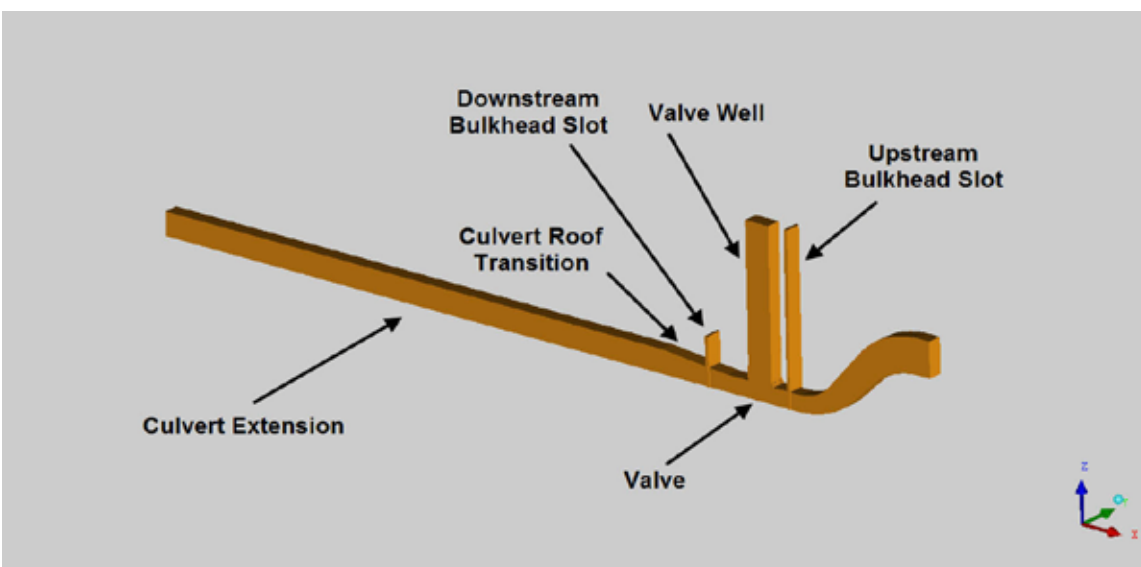

Figure 2. Geometric features of the John Day Lock valve model.

Pictures of the CAD model in Figure 3 show details of the valve geometry. The John Day Lock culvert valves are double skin plated, wherein the structural members are covered with steel plating. Steady-state flow conditions were computed for six different valve positions. A 3-D computational mesh was created for each of the positions. The cell sizes ranged from 1 mm on

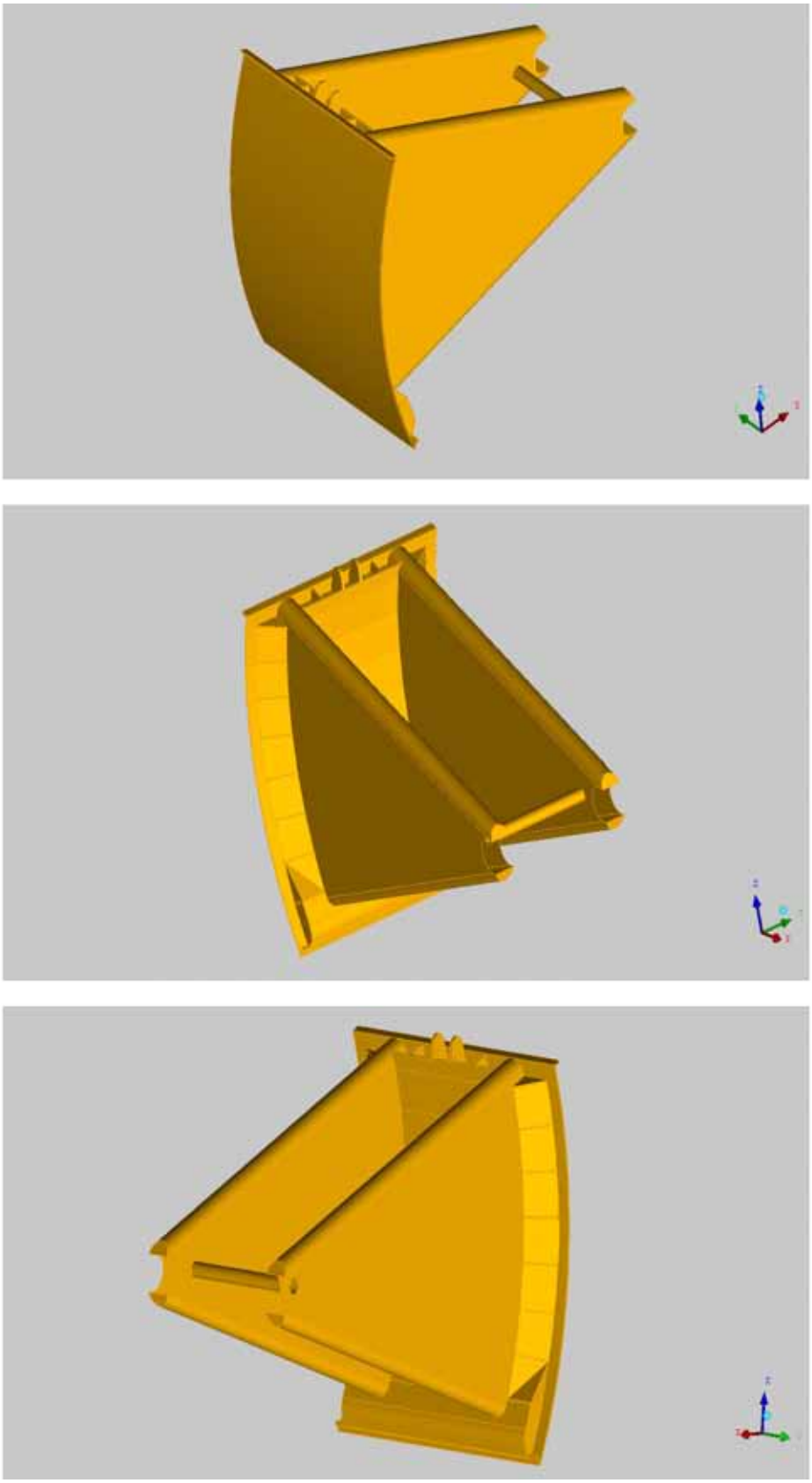

Figure 3. CAD model of the John Day Lock valve.

the valve surface (Figure 4) to 0.75 m (2.5 ft) in regions away from the valve. Small cell sizes were required to capture the details on the valve lip (Figure 5), a critical element for simulating flow separation and jet contraction downstream of the valve accurately. The meshes had between 143,000 and 220,000 nodes and between 706,000 and 1.2 million tetrahedral cells. The valve surface in each mesh was defined by about 66,000 triangular cell faces.

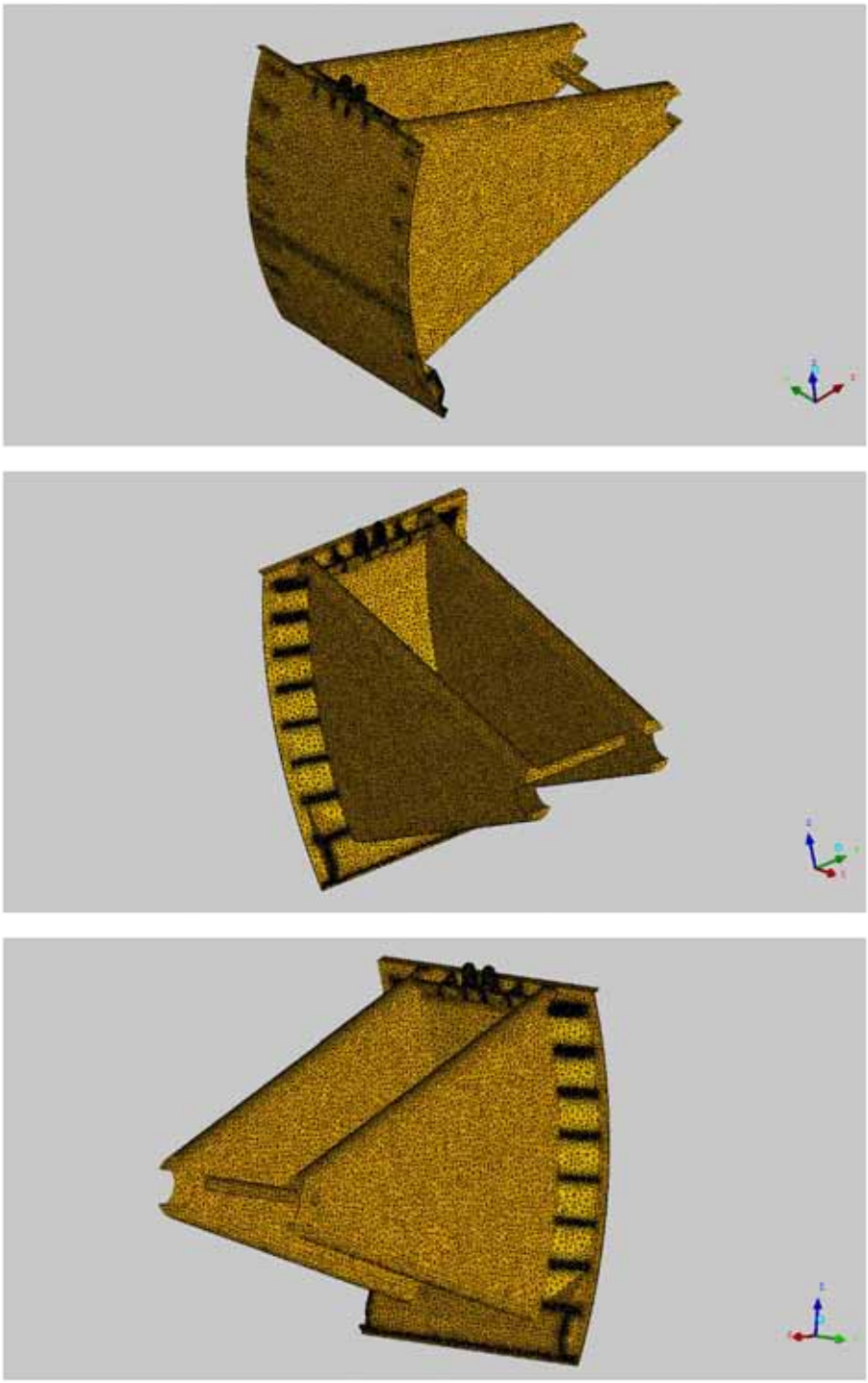

Figure 4. Surface mesh of the John Day Lock valve model.

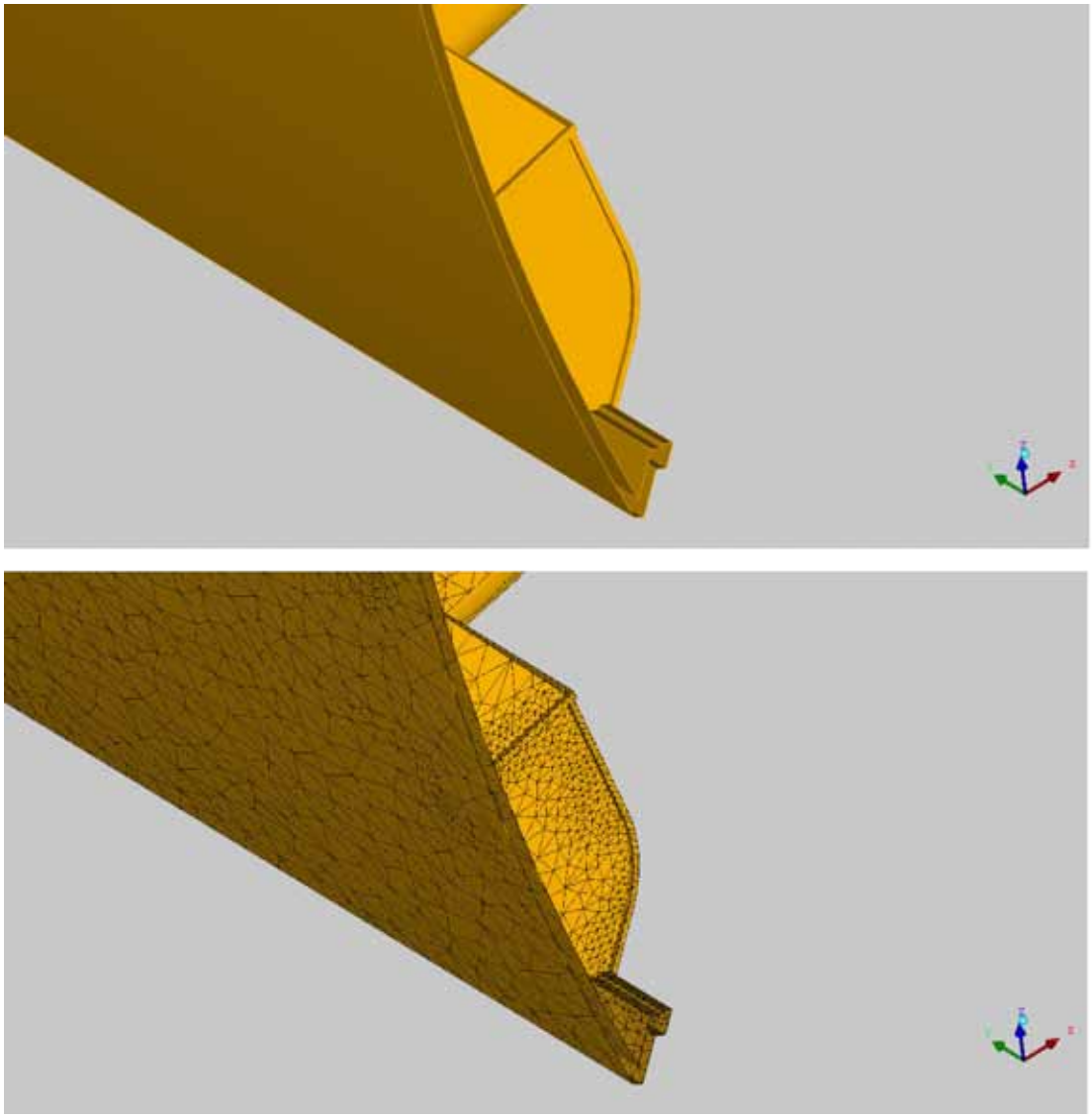

Figure 5. Details at the lip of the John Day Lock valve model.

The lock modeling capabilities of the 3-D Reynolds Averaged Navier-Stokes equation component of the Adaptive Hydraulics (AdH) code (*adh.usace.army.mil*) have been demonstrated by Stockstill (2009). Hammack et al. (2009) used AdH to calculate hydrodynamic forces on the John Day Lock valve. Hydrostatic pressures were applied to both the inflow and outflow boundaries to drive the flow. These pressures represented an upper and lower pool of el 81.686 and el 47.244, respectively, a 34.442-m (113-ft) head differential. The downstream bulkhead slot was capped, whereas the moving mesh feature of AdH was used to track the water surfaces in the upstream bulkhead slot and valve well.

This technical note presents John Day Lock valve simulations conducted with the commercial flow solver ANSYS Fluent (*www.fluent.com*). The Fluent model used a fixed mesh for each valve position. The water-surface elevations (mesh height) in the valve well and upstream bulkhead slot were taken from the AdH results (Hammack et al. 2009). The discharges that AdH computed were set as the flux boundary conditions of the Fluent model. The Fluent simulations

used the k-ε turbulence closure model and the no-flux boundaries were assigned a friction coefficient representing the surface roughness for the conduit's concrete or the valve's steel.

HYDRAULIC CHARACTERISTICS: The simulations provided pressure and velocity vectors at each computational node. These pressures and velocities were evaluated to determine the valve's hydraulic performance. A summary of the computed hydraulic conditions is given in Table 1. Velocity contours for the various valve openings are shown in Figure 6. These contours illustrate that the maximum velocities are located in the jet immediately downstream from the valve lip. The magnitudes of the jet velocity, V_2 in Figure 1, are listed in Table 1.

The stream traces provided in Figures 7 and 8 illustrate the flow patterns at the valve. The valve intercepted the upper portion of the culvert flow causing a circulation of rather slow velocity up the well. The reverse circulation pattern near the top of the culvert is demonstrated by the stream traces on the oblique views of Figure 8. As flow passed beneath the valve, it accelerated via contracting to form the jet.

Table 1. Hydraulic conditions for the John Day Lock culvert valve computational model.

Valve Opening (b/B)	Discharge (cms)	Upstream Bulkhead Slot Water-Surface Elevation (m)	Valve Well Water-Surface Elevation (m)	Velocity in Jet Downstream of Valve (mps)
0.10	33.4	81.382	81.290	26.0
0.35	112.4	78.834	78.473	31.4
0.55	200.7	73.000	72.421	33.5
0.65	248.2	68.458	67.544	33.4
0.75	302.1	61.966	60.991	33.8
0.90	387.1	48.189	47.427	28.6

The flow solutions were used to calculate hydraulic coefficients so that the performance of the John Day Lock tainter valves could be compared to valves at other locks. The pressure coefficient, C_p, is used to evaluate the pressure change attributed to the interaction of the flow and the partially-opened valve. The pressure coefficient is the ratio of the difference in a reference pressure head and the local pressure head to the average velocity head in the culvert

$$C_P = \frac{P_r - P_i}{V^2 / 2g} \tag{1}$$

where

P_r = pressure head at the reference location,
P_i = local pressure head,
V= average flow velocity in the culvert upstream of the valve, and
g = acceleration due to gravity.

The water-surface elevation in the upstream bulkhead slot was used as the reference pressure head. Contours of the John Day Lock valve pressure coefficients are shown in Figure 9 for a b/B of 0.55 and 0.65. Figure 9 also shows pressure distribution within a physical model as reported by Pickering (1981).

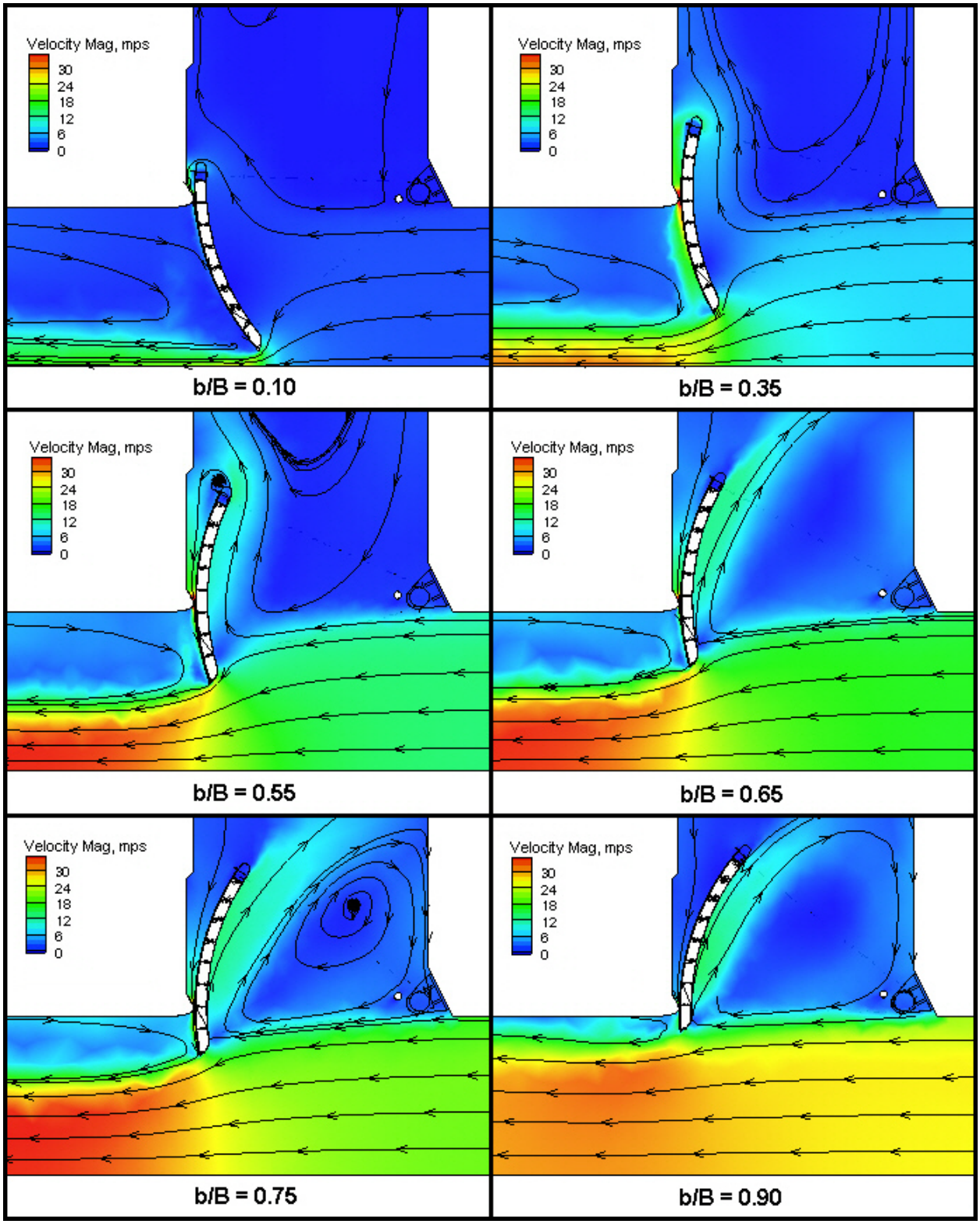

Figure 6. Velocity magnitude and flow patterns from the John Day Lock valve model.

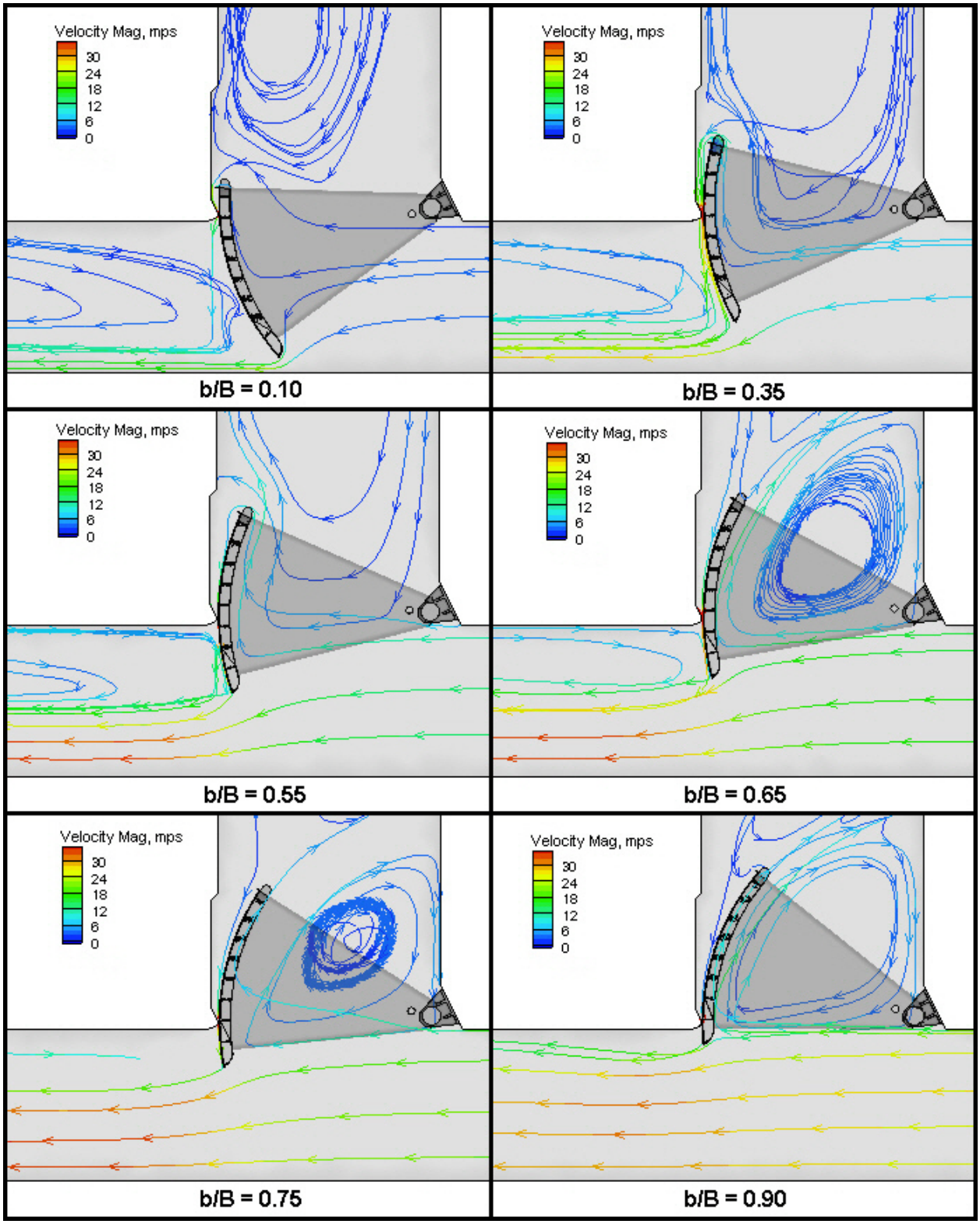

Figure 7. Side view of stream traces from the John Day Lock valve model.

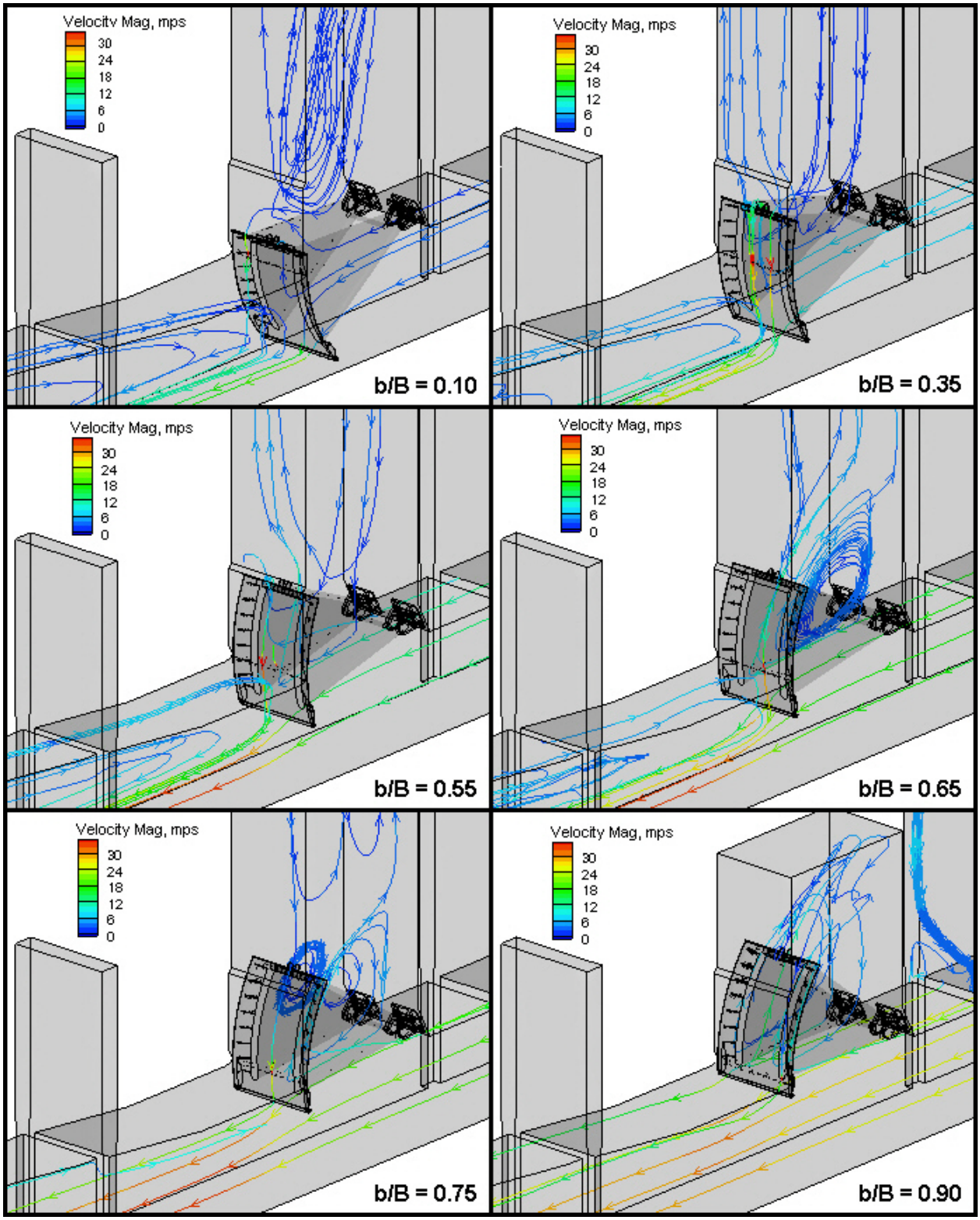

Figure 8. Oblique view of stream traces from the John Day Lock valve model.

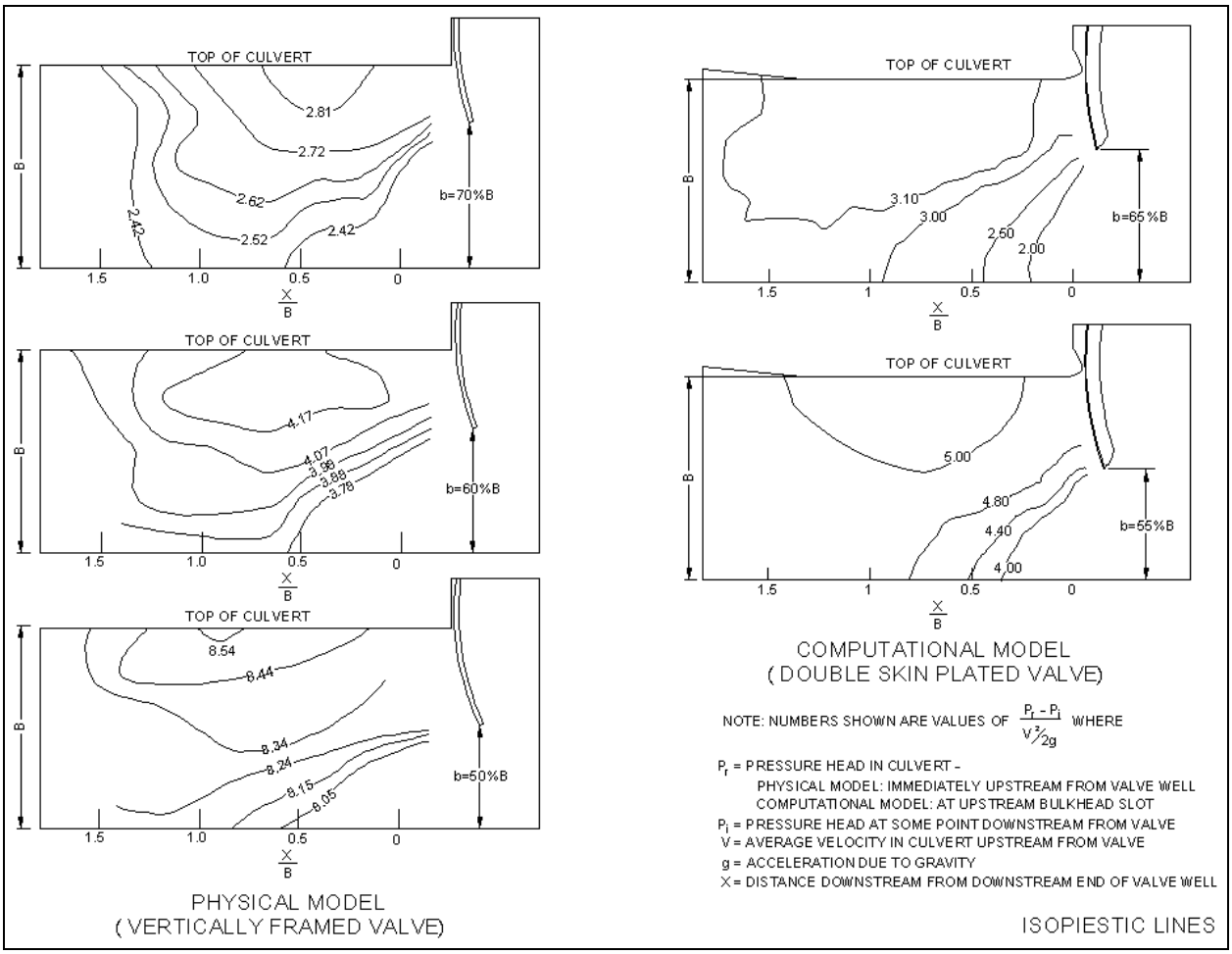

Figure 9. Pressure coefficient contours downstream of reverse tainter valves.

Direct comparison of pressure coefficients between the computational and physical models is difficult because the valve openings and valve designs differ. The curvature of the John Day Lock valve was larger than that tested in the physical model. Here, the curvature is defined as the valve radius-to-culvert-height ratio, R/B as shown in Figure 1. The valve radius-to-culvert-height ratio of the John Day Lock was 1.32, whereas the model reported by Pickering (1981) had a ratio of 1.43. Another difference between these valves is that the John Day Lock valve design was a double skin plate and the physical model valve was of the vertically framed design (refer to EM 1110-2-1610). The pressure coefficients can be compared by realizing that the computational model results are for valve openings between those reported by Pickering (1981). The C_p value of 5 with a double skin plate valve opening of 0.55 is between the C_p values on the vertically framed valve openings of 0.5 and 0.6. Likewise, the C_p of 3 with the double skin plate valve opening of 0.65 is between the values given for the vertically framed valve openings of 0.6 and 0.7. So, even though a direct comparison cannot be made, the plots suggest that the computational model's pressure coefficients are reasonable when compared to the laboratory data. The plots illustrate that both models found that the pressure distribution varied with the valve opening. The computational model correctly predicted that the low-pressure zone was located near the top of the culvert and moved upstream as the valve was opened.

Valve efficiency can be expressed in terms of the discharge coefficient, C_d, which quantifies the head-discharge relation for a particular valve opening.

$$C_d = \frac{Q}{bW\sqrt{2g\Delta h}} \tag{2}$$

where

Q = culvert discharge,
W = culvert width, and
Δh= change in pressure head across the valve.

Discharge coefficients for a physical model and four prototype locks are provided in Figure 10 along with those computed for the present study. Table 2 lists the discharge coefficient for each valve position tested.

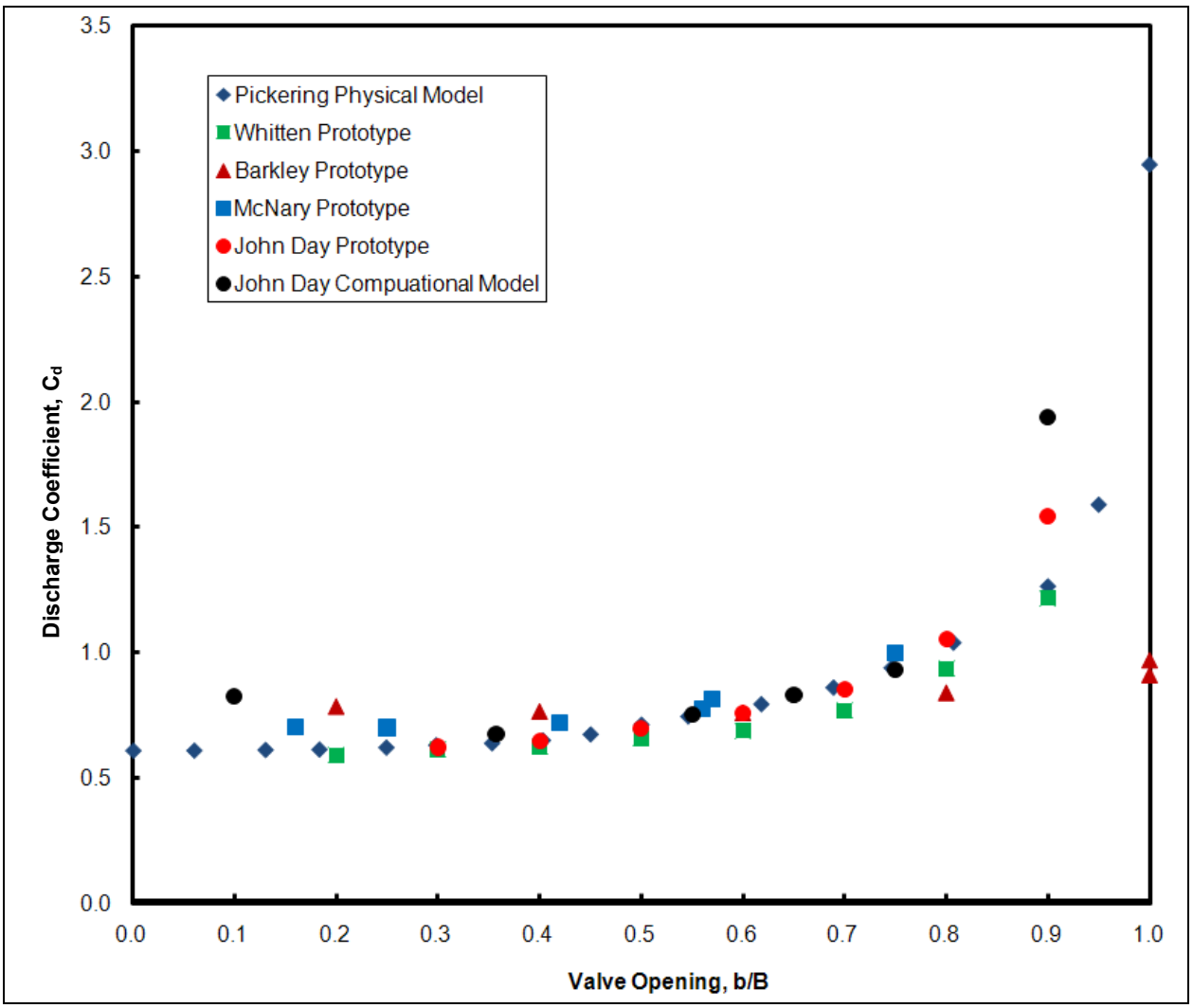

Figure 10. Reverse tainter valve discharge coefficients.

Table 2. Hydraulic coefficients for John Day Lock culvert valve.

Valve Opening (b/B)	Discharge Coefficient (C_d)	Contraction Coefficient (C_c)	Loss Coefficient (k_v)
0.10	0.827	0.824	146.2
0.35	0.673	0.655	18.00
0.55	0.756	0.698	5.791
0.65	0.833	0.733	3.412
0.75	0.931	0.764	2.049
0.90	1.937	0.964	0.329

The physical model data are from the general study reported by Pickering (1981). The prototype data are from reports of field experiments by McGee (1989) at Whitten Lock (formerly Bay Springs Lock), Neilson (1975) at Barkley Lock, Neilson and Pickett (1986) at John Day Lock, and Pickett (1960) at McNary Lock.

The computational results fit within the spread of the various projects, although it seems to overpredict the efficiency at valve openings greater than 0.80. The prototype data were computed from unsteady flow tests of the locks filling, assuming that the discharge was evenly distributed between the two filling culverts. The discharge during valve opening was determined as the product of the rate-of-rise of the lock chamber water surface and the chamber's plan area. The change in pressure head across the valve was measured with pressure cells mounted on the culvert roof upstream and downstream from the valve.

The contraction coefficient, C_c, is a measure of the minimum height of the jet issuing beneath the valve lip in terms of the valve opening, b, as sketched in Figure 1. There is no universal value of C_c for reverse tainter valves. Published values of the contraction coefficient show considerable scatter (Headquarters, U.S. Army Corps of Engineers 1975). This scatter is partially attributed to the fact that the contraction cannot be measured directly, but rather it is determined from other observable quantities similar to the discharge coefficient.

The relation between the contraction coefficient and the discharge coefficient is given by Rouse (1946) as

$$C_d = \frac{C_c}{\sqrt{1 - C_c^2 \left(b/B\right)^2}} \tag{3}$$

The validity of Equations 2 and 3 requires the downstream pressure measurement to be at the vena contracta (Neilson 1975). The most difficult quantity to measure is the pressure at the station where the jet is at a minimum height, because the station varies with valve opening (Neilson 1975). Also, for a reverse tainter valve, C_c is very sensitive to the valve lip shape and the angle of the bottom, β, which varies as the valve is opened. Therefore, accurate simulation of the jet shape requires that details of the valve lip be included in the computational model, as shown in the CAD picture and the surface mesh in Figure 5.

Contraction coefficients for several projects and the von Mises (1964) potential flow solutions for slot flow are provided in Figure 11. The von Mises solutions for lip angles of 45 and 90 degrees were taken from von Mises (1964), which is a translation of the original 1917 publication. The computational model results agree reasonably well with the laboratory and field data except at the small valve opening and when the valve is nearly fully-opened.

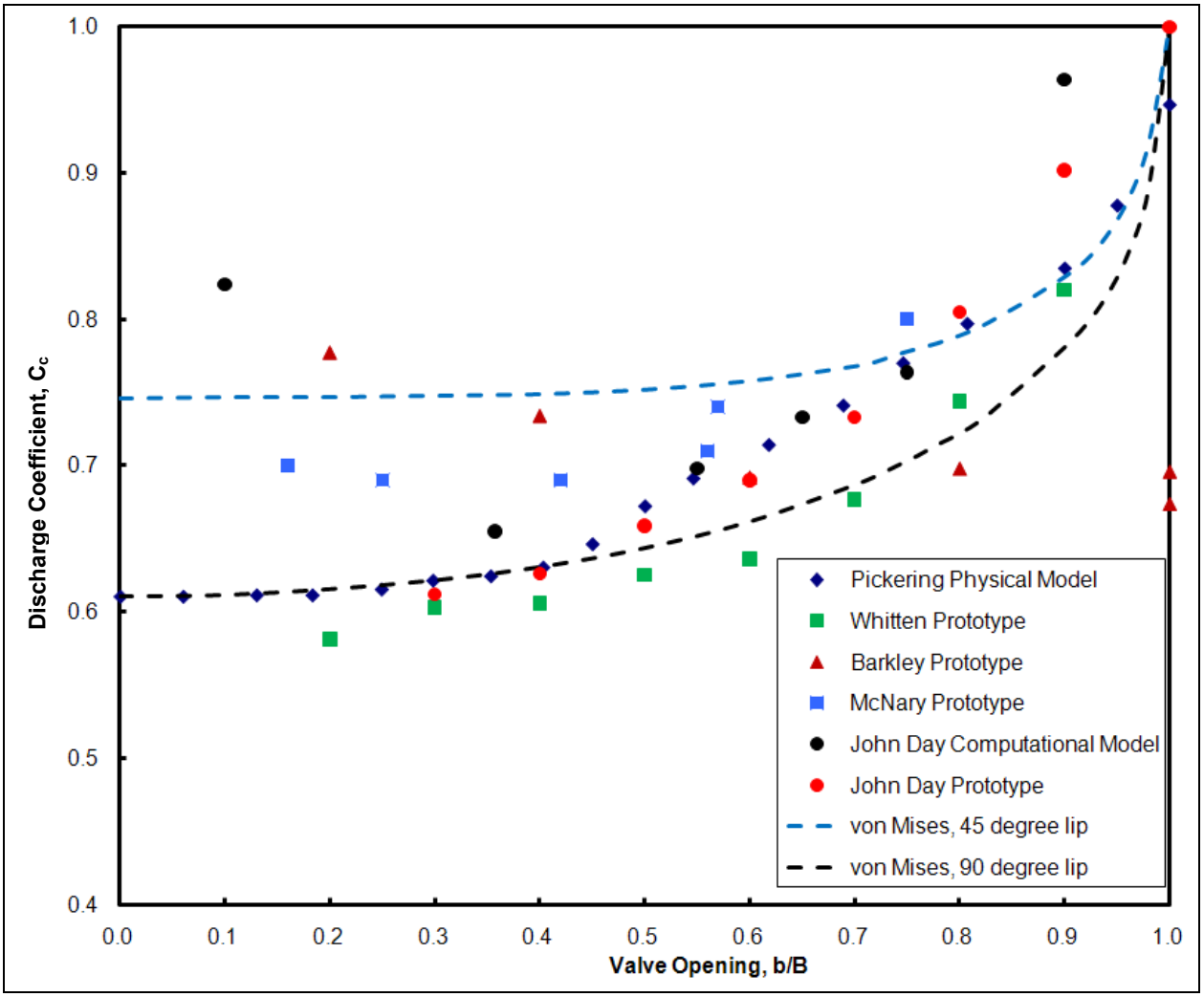

Figure 11. Reverse tainter valve contraction coefficients.

The head loss across the valve, H_L, is related to the velocity head by the valve loss coefficient, k_v, such that

$$H_L = k_v \frac{V^2}{2g} \tag{1}$$

Note that both the head loss coefficient and the discharge coefficient are measures of a valve's efficiency. However, there are distinct differences in application of these coefficients. The head loss coefficient is expressed in terms of the average culvert velocity, V, whereas, the discharge

coefficient is related to the velocity under the valve, Q/bW in Equation 2. Figure 1 illustrates that the head loss across the valve, H_L in Equation 4, is not necessarily equal to the change in pressure head across the valve, Δh in Equation 2. Values of the loss coefficient determined from the John Day Lock computational model are listed in Table 2.

SUMMARY: Reverse tainter valves have been used almost exclusively for the past 70 years to control the filling and emptying of Corps navigation locks. Evaluation of a lock valve's hydraulic performance requires knowledge regarding culvert velocity and pressure magnitudes and variations in the valve vicinity. Pressure, discharge, contraction, and energy loss coefficients are used to compare the relative efficiency of differing valve configurations across Corps projects. These nondimensional coefficients allow comparison of lock filling and emptying systems that have a range of culvert sizes and lifts.

A 3-D computational model study of the flow conditions at a reverse tainter valve has been completed. The model reproduced the details of a John Day Lock filling culvert and reverse tainter valve. The model solutions were used to calculate hydraulic coefficients, which were subsequently compared to laboratory and field data from various projects. The coefficients determined from the 3-D flow model solutions were essentially within the variability of existing laboratory and field data. The largest differences between observed and computed values were at the beginning and end of the valve's opening operation (b/B of 0.10 and 0.90). This study demonstrated the use of a computational model to evaluate the hydraulic performance of a reverse tainter valve in a lock culvert system.

ADDITIONAL INFORMATION: This CHETN is a product of the Hydrodynamic Design Guidance and Evaluation Tools for Inland Structures work unit of the Navigation Systems Research Program being conducted at the U.S. Army Engineer Research and Development Center, Coastal and Hydraulics Laboratory. Question about this technical note can be addressed to Allen Hammack (601-634-3628; email: *Allen.Hammack@usace.army.mil*) or Dr. Richard L. Stockstill (601-634-4251; e-mail: *Richard.L.Stockstill@usace.army.mil*). For information about the Navigation Systems Research Program, contact the Program Manager, Charles E. Wiggins at 601-634-2471, e-mail: *Charles.E.Wiggins@usace.army.mil*. This technical note should be cited as follows:

> Hammack, E. A. and Stockstill, R. L. 2011. *Computational flow model of a reverse tainter valve*. ERDC/CHL CHETN-IX-27. U.S. Army Engineer Research and Development Center, Vicksburg, MS. *http://chl.erdc.usace.army.mil/chetn*

REFERENCES

Davis, J. P. 1989. *Hydraulic Design of Navigation Locks*. Miscellaneous Paper HL-89-5, Vicksburg, MS: U.S. Army Engineer Waterways Experiment Station.

Hammack, E. A., M. T. Fong, and R. L. Stockstill. 2009. *Calculating forces on components of hydraulic structures*. Coastal and Hydraulics Engineering Technical Note ERDC/CHL CHETN-IX-21. Vicksburg, MS: U.S. Army Engineer Research and Development Center.

Headquarters, US Army Corps of Engineers. 1975. *Hydraulic design of lock culvert valves*. Engineer Manual No. 1110-2-1610, Washington, D.C.

McGee, R. G. 1989. *Prototype evaluation of Bay Springs Lock, Tennessee-Tombigbee Waterway, Mississippi*. Technical Report HL-89-15, Vicksburg, MS: U.S. Army Engineer Waterways Experiment Station.

Neilson, F. M. 1975. *Barkley Lock prototype tests, Cumberland River, Kentucky*. Technical Report H-75-11, Vicksburg, MS: U.S. Army Engineer Waterways Experiment Station.

Neilson, F. M., and E. B. Pickett. 1986. *John Day Lock hydraulic prototype tests, Columbia River, Washington*. Draft technical report, Vicksburg, MS: U.S. Army Engineer Waterways Experiment Station.

Pickett, E. B. 1960. *Hydraulic prototype tests of tainter valve, McNary Lock, Columbia River, Washington*. Technical Report No. 2-552, Vicksburg, MS: U.S. Army Engineer Waterways Experiment Station, Vicksburg, Mississippi.

Pickett, E. B., and F. M. Neilson. 1988. *Lock hydraulic system model and prototype study data*. Miscellaneous Paper HL-88-1, Vicksburg, MS: U.S. Army Engineer Waterways Experiment Station.

Pickering, G. A. 1981. *Lock culvert valve loss coefficients; hydraulic model investigation*. Technical Report HL-81-10, Vicksburg, MS: U.S. Army Engineer Waterways Experiment Station.

Rouse, H. 1946. *Elementary Mechanics of Fluids*. New York, NY: Dover Publications, Inc.

Stockstill, R. L. 2009. *Computational model of a lock filling system*. Coastal and Hydraulics Engineering Technical Note ERDC/CHL CHETN-IX-18. Vicksburg, MS: U.S. Army Engineer Research and Development Center.

von Mises, R. 1964. *Computation of discharge and overfall coefficients*. Translation No. 64-8, Vicksburg, MS: U.S. Army Engineer Waterways Experiment Station.

NOTE: *The* contents *of this technical note are not to be used for advertising, publication, or promotional purposes. Citation of trade names does not constitute an official endorsement or approval of the use of such products.*